FX520

РОТОРНАЯ КОСИЛКА

Издано 03/06 **S/N C52000133703 - C52000162704 inclusive** Изделие № C520RU010P

КАТАЛОГ ЗАПАСНЫХ ЧАСТЕЙ

Руководство оператора с важной информацией по вопросам безопасности, монтажа, эксплуатации и обслуживания было упаковано вместе с данным каталогом запасных частей в ходе окончательной заводской проверки. Если руководство оператора по какой-либо причине утеряно, пожалуйста, свяжитесь с **Schulte Industries Ltd.** по тел. **(306) 287 3715** для того, чтобы бесплатно

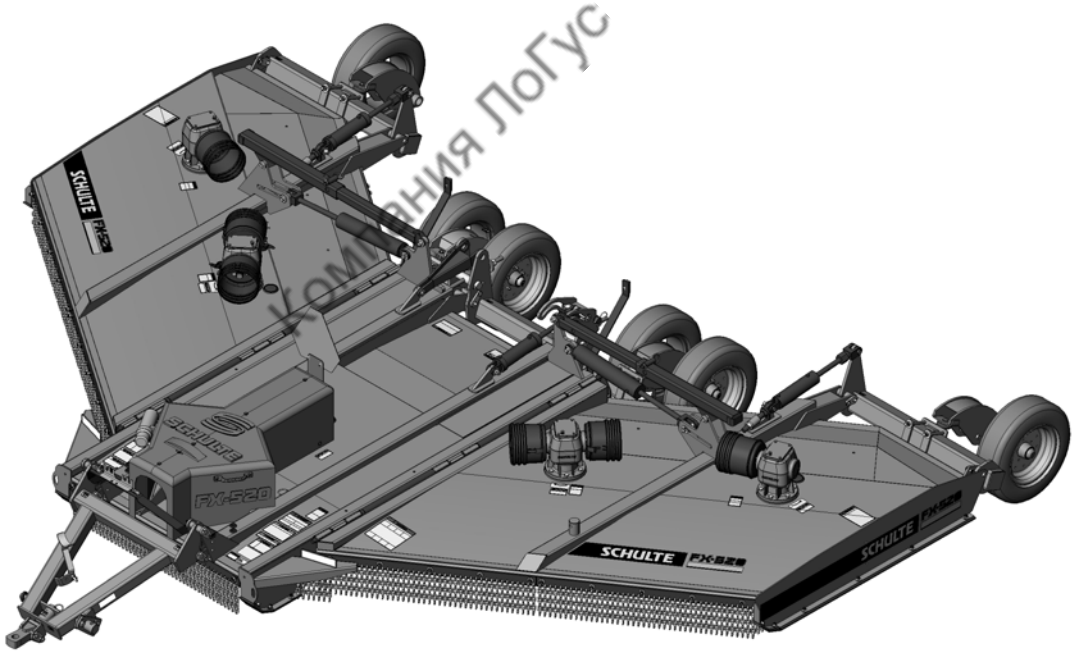

Компания ЛоГус

RUSSIA

Schulte Industries Ltd.
P.O. Box 70
Englefeld Saskatchewan
Canada S0K 1N0
Tel. (306) 287-3715
Fax. (306) 287-3355
Parts Fax. (306) 287-4066
Email: info@schulte.ca

ISO 9001:2000

MEMBER OF THE ALAMO GROUP
ALWAYS ON THE CUTTING EDGE

© 2006 Alamo Group Inc.

Руководство по заказу запчастей

Следующие инструкции должны помочь избежать затяжек времени и ошибок при обработке заказов на оборудование из данного раздела.

1. Формуляр заказа должен включать имя и адрес заказчика, плательщика и, если возможно, серийный номер машины, для которой заказываются детали.

2. В формуляре заказа должно быть четко указано количество каждого наименования, полный и правильный номер детали и описание детали.

3. Schulte Industries Ltd оставляет за собой право заменять детали, если это возможно.

4. Schulte Industries Ltd оставляет за собой право изменять цены без предварительного уведомления.

ПРИМЕЧАНИЕ: Пожалуйста, обращайтесь к разделу Техники безопасности, расположенному перед Руководством оператора, для получения информации о точных номерах деталей при заказе наклеек со сроками технического обслуживания. Предупреждающие наклейки поставляются бесплатно отделом запчастей Schulte.

ПРИМЕЧАНИЕ: Если в руководстве оператора нет каталога по заказу запчастей, пожалуйста, закажите его бесплатно в отделе запасных частей Schulte. НЕ приступайте к работе на данном оборудовании до тех пор, пока вы не ПРОЧИТАЕТЕ, ОСМЫСЛИТЕ И ВЫПОЛНИТЕ инструкции по эксплуатации и технике безопасности, содержащиеся в руководстве оператора.

ПРИМЕЧАНИЕ: Учтите, что внешний вид некоторых деталей может отличаться от их изображения в руководстве.

Компания Лотус

В целях обеспечения максимальной безопасности и оптимальной надежности изделия всегда используйте оригинальные запчасти Schulte. Использование запчастей других производителей может привести к преждевременному выходу из строя или серьезным поломкам, которые могут явиться причиной нанесения травм или смерти. По вопросам, касающимся запасных частей, можно напрямую обращаться по адресу:

Schulte Industries Ltd ®
P.O. Box 70
Englefeld, Saskatchewan
Canada S0K 1N0
Phone: (306)-287-3715
Parts Fax: (306) 287-4066
Email: info@schulte.ca

TABLE OF CONTENTS

CENTER SECTION 2
LEFT WING 4
RIGHT WING 6
HITCH FRAME 8
PRECISION HITCH 10
HITCH JACK (232-750) 11
PARALLEL RING HITCH 12
MAIN SHIELD ASSEMBLY 14
517 SINGLE/ DOUBLE AXLE 16
618 SINGLE AXLE 18
517 WALKING AXLE 20
HUB AND TIRES, 517 22
HUB AND TIRES, 618 24
BLADE CARRIERS 26
FIXED KNIFE KIT - BLADES 28
FIXED KNIFE KIT – KNIFE MOUNTS 30
FIXED KNIFE KIT – GRASS SEED SHROUDS 32
FIXED KNIFE KIT – COTTON SHROUDS 33
CHAIN GUARDS 34
FRONT BELTING 36
HYDRAULICS 38
SINGLE ACTING WINGLIFT CIRCUIT 40
PHASING CIRCUIT 41
WING LIFT CYLINDER, 3-1/2” X 16” (100-3061) 42
PHASING CYLINDERS 43
TRACTOR SHAFT 44
CENTER SHAFT 45
OUTER WING SHAFT 46
FRICTION CLUTCH (341-3549) 47
INNER WING SHAFT 48
FRICTION CLUTCH (341-4441) 49
DIVIDER GEARBOX (330-9001) 50
RIGHT ANGLE GEARBOX (330-7014) 52
RIGHT ANGLE GEARBOX (330-7023) 54
RIGHT ANGLE GEARBOX (330-7024) 56
RIGHT ANGLE GEARBOX (330-7034) 58
TRANSPORT KITS 60
PARTS INDEX 61

Компания ЛоГус

CENTER SECTION

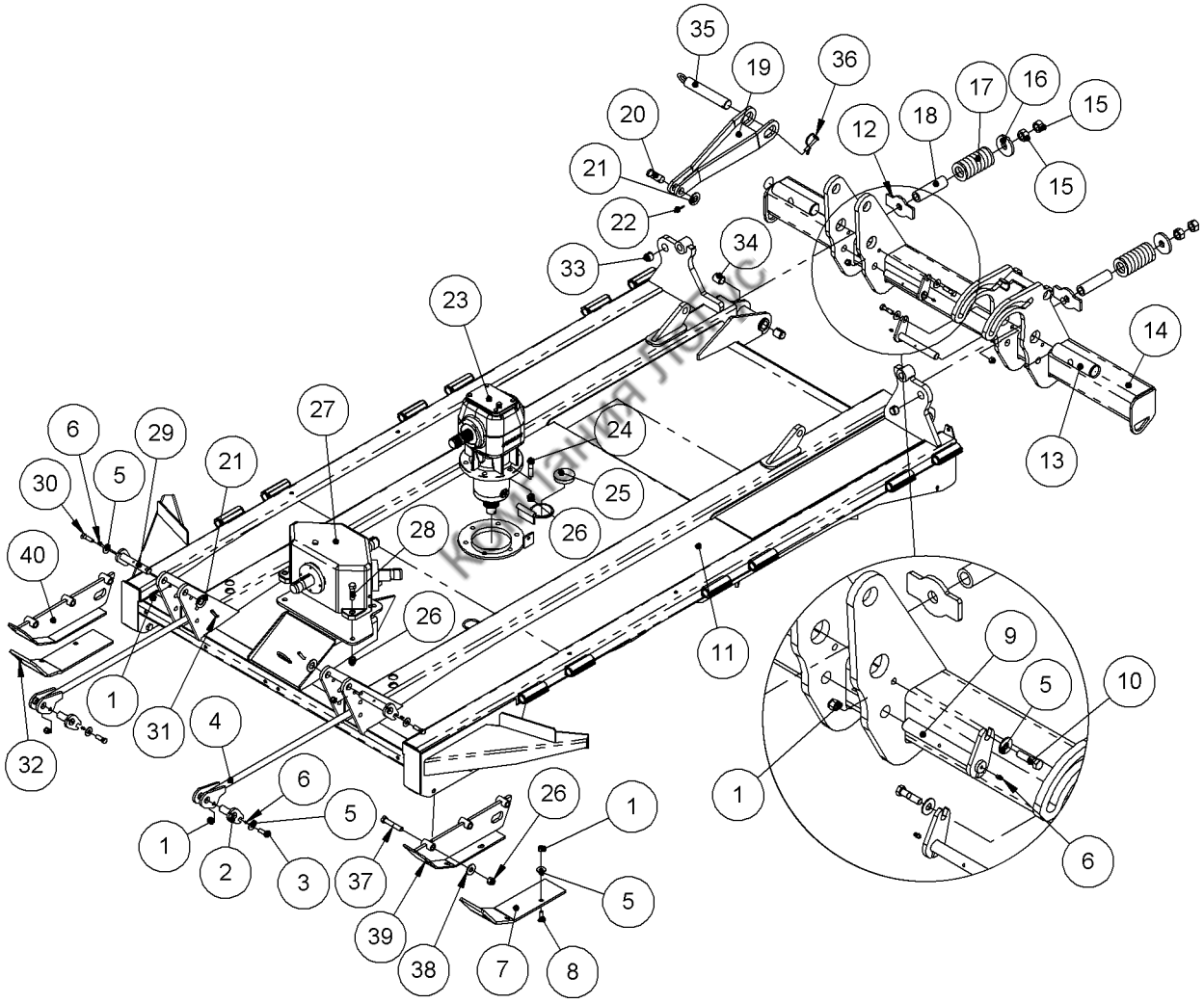

CENTER SECTION

Ref.	Part No.	Description	Qty
1	270-007	Lock Nut, ½” UNC, Plated	12
2	CS01-133	Pin, 1” x 2-1/16” U.L.	2
3	250-059	Bolt, ½” x 1-1/2” UNC GR5 Plated	2
4	C520-130	Tension Rod	2
5	256-011	Washer, ½” Plated AS Type A	12
6	273-006	Grease Nipple, Self-tap, ¼-28	6
7	C520-127	Center Skid, Left	1
8	250-201	Plow Bolt, ½” x 1-1/2” UNC GR5 Plated	6
9	C520-143	Center Wing Standard Mount Pin	2
10	250-057	Bolt, ½” x 2” UNC GR5 Plated	2
11	C520-101	FX520 Center Section	1
12	C520-148	Stopper	2
13	C520-147	Trunion	2
14	C520-120	Wheel Standard, Center Section	1
15	257-008	Nut, 1” UNC Plated	4
16	C520-132	Washer	2
17	229-011	Compression Spring, 5/8” Wire	2
18	C520-131	Spacer	2
19	C520-165	Transport Arm	1
20	302-013	Clevis Pin	1
21	256-001	Washer, 1” Plated SAE	3
22	271-005	Cotter Pin, 3/16” x 1-1/2” Plated	1
23	330-7014	Bevel Gear Box, LF-223J, 1.18:1 rat 1-3/4Z20	1
24	250-088	Bolt, 5/8” x 2-1/2” UNC GR5 Plated	6
25	280-151	Plastic Bolt Access Cover	1
26	270-004	Lock Nut 5/8” UNC GR5 Plated	16
27	330-9001	Divider Gear Box, T305, 1.35:1 rat 1-3/4Z20	1
28	250-089	Bolt, 5/8” x 2-1/4” UNC GR5 Plated	4
29	C520-142	Hitch Mount Pin	2
30	250-060	Bolt, ½” x 1-3/4” UNC GR5 Plated	2
31	262-006	Roll Pin 3/8” x 2” Plated	2
32	C520-128	Center Skid, Right	1
33	362-020	Tension Bushing 1” ID x 1-1/4” OD x 7/8” Lg	2
34	362-011	Tension Bushing 1” ID x 1-1/4” OD x 1-1/2” Lg	4
35	C520-140	Transport Lock Pin	1
36	302-038	Tab Lock Pin, 3/8” x 1 ¾” U.L.	1
37	250-086	Bolt, 5/8” x 3 ½” UNC Gr 5 Plated	6
38	256-006	Washer, 5/8” Plated	6
39	C520-210	Left skid Mount, FX520	1
40	C520-211	Right skid Mount, FX520	1

Компания Лотус

LEFT WING

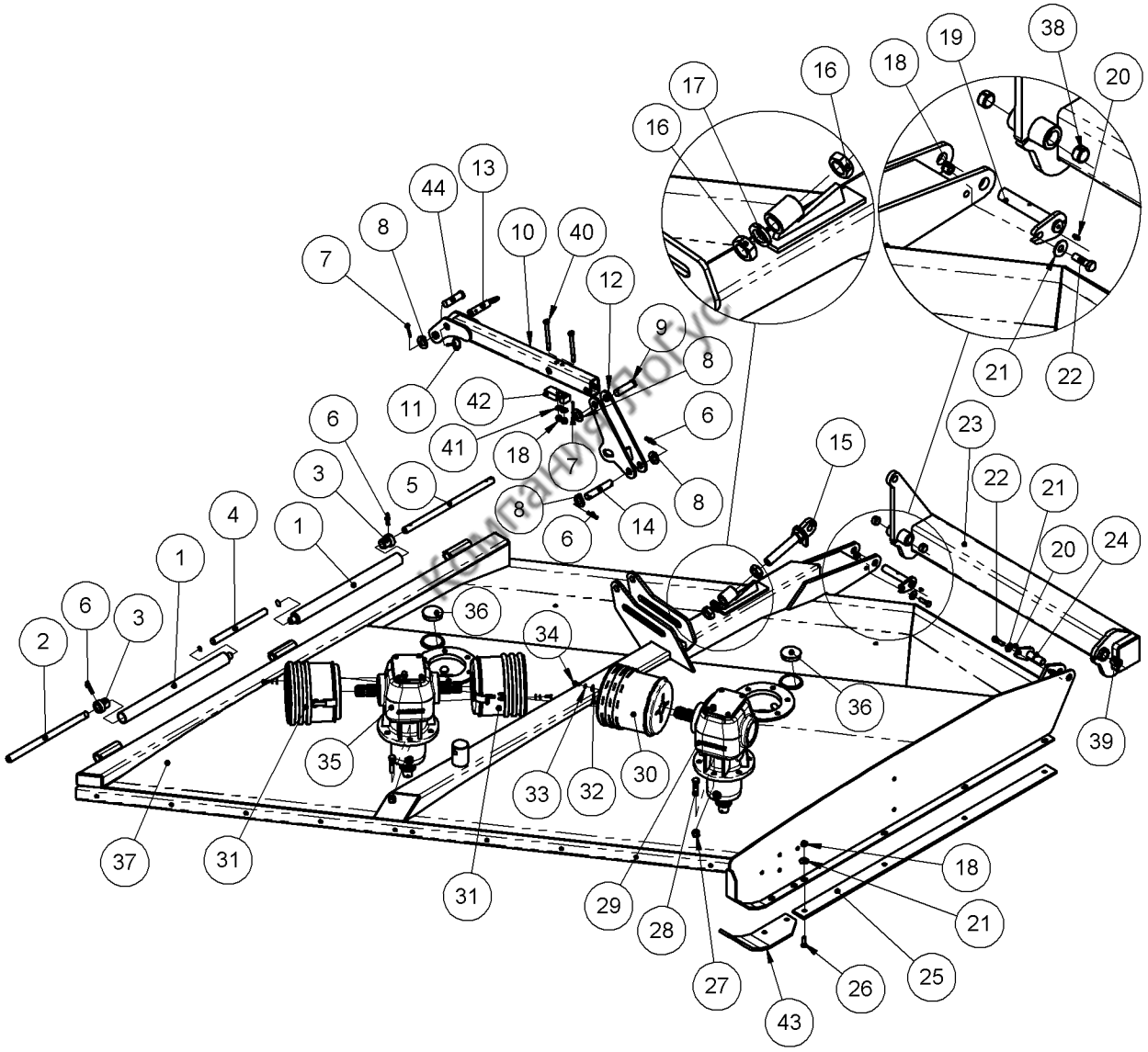

38
19
18
16
17
20
16
13
44
8
10
40
7
12
9
8
21
22
11
42
6
41
18
7
6
15
23
3
5
8
22
21
4
1
14
6
20
24
1
6
3
36
34
2
36
39
35
33
32
30
37
31
31
29
28
18
21
27
26
25
43

LEFT WING

Ref.	Part No.	Description	Qty
1	C520-192	Filler Pipe	2
2	C520-136	Hinge Pin, 17-3/4” long, one hole	1
3	C520-193	Sleeve	2
4	C520-194	Pin, 1” x 12” long	1
5	C520-138	Hinge Pin, 19-7/8” long, three holes	1
6	262-006	Roll Pin, 3/8” x 2”	4
7	271-005	Cotter Pin, 3/16” x 1-1/2”	2
8	256-001	Washer, 1” SAE	4
9	302-002	Clevis Pin, 1” x 3 1/8” UL	1
10	C520-195	Lock Bar Wing Support	1
11	300-012	Lynch Pin, ¼”	1
12	C520-196	Link, Wing Support	1
13	C520-149	Wing Transport Pin	1
14	C520-168	Wing Cylinder Pin	1
15	C320-132	Wing Adjustment Assembly	1
16	257-054	Jam Nut, 1-1/4” UNC	2
17	255-020	Lockwasher, 1-1/4”	1
18	270-007	Locknut, ½” UNC	11
19	C520-144	Inner Wing Wheel Standard Mount Pin	1
20	273-006	Grease Nipple, Self Tap, ¼-28	2
21	256-011	Washer, ½” AS Type	9
22	250-060	Bolt, ½” x 1-3/4” UNC	2
23	C520-121	Wheel Standard, Left Wing	1
24	C520-145	Outer Wing Wheel Standard Mount Pin	1
25	C520-134	Skid Mount Wing, FX520	1
26	250-201	Plow Bolt, ½” x 1-1/2” UNC	7
27	270-004	Locknut, 5/8” UNC	12
28	250-088	Bolt, 5/8” x 2-1/2” UNC	12
29	330-7024	Gearbox	1
30	341-6243	SFT Cone, 259 mm x 235 mm long	1
31	341-6242	SFT Cone, 252 mm x 210 mm long	2
32	256-020	Washer, 5/16”	12
33	255-015	Lockwasher, 5/16”	12
34	251-008	Bolt, M8 x 20 mm	12
35	330-7034	Gearbox	1
36	280-151	Plastic Access Cover	2
37	C520-150	Left Wing Assembly	1
38	362-010	Tension Bushing, 1” x 1-1/4” x ¾” Long	2
39	362-011	Tension Bushing, 1” x 1-1/4” x 1-1/2” Long	1
40	250-046	Bolt, ½” x 5” UNC GR5 Plated	2
41	256-012	Washer, ½” Plated SAE	2
42	C520-197	Spacer Block, 1”, Wing Transport	1
43	C502-137	Skid, Wing Outer Left	1
44	302-015	Clevis Pin, 1” x 2-7/8” UL	1

Компания ЛоГус

RIGHT WING

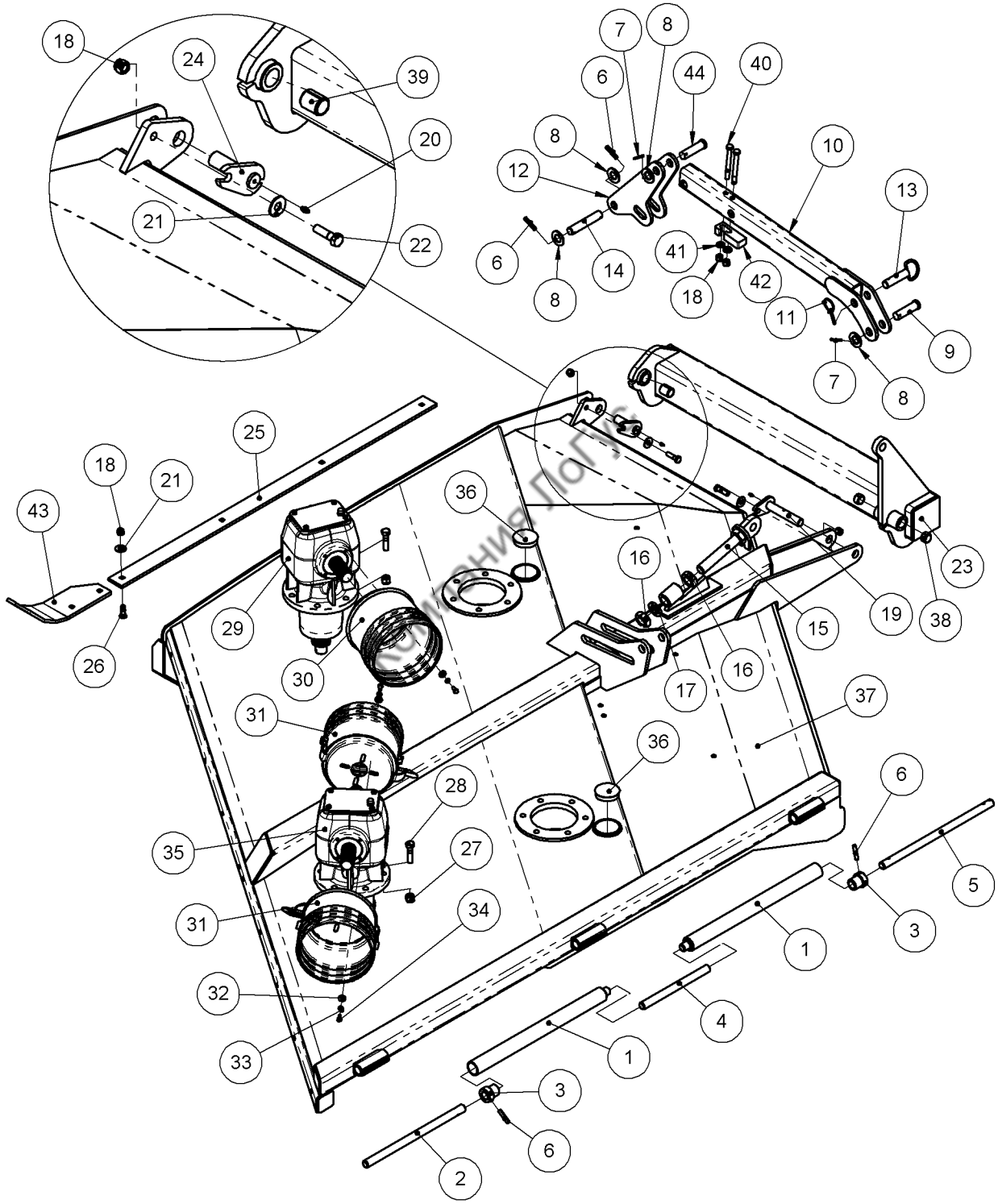
18
24
39
20
21
22
7
8
6
44
40
8
12
10
13
6
14
41
42
8
18
11
9
7
8
25
18
21
43
36
16
23
29
15
19
38
26
30
16
17
37
31
36
28
6
35
27
5
31
34
3
1
32
4
33
1
3
6
2

RIGHT WING

Ref.	Part No.	Description	Qty
1	C520-192	Filler Pipe	2
2	C520-136	Hinge Pin, 17-3/4” long, one hole	1
3	C520-193	Sleeve	2
4	C520-194	Pin, 1” x 12” long	1
5	C520-138	Hinge Pin, 19-7/8” long, three holes	1
6	262-006	Roll Pin, 3/8” x 2”	4
7	271-005	Cotter Pin, 3/16” x 1-1/2”	2
8	256-001	Washer, 1” SAE	4
9	302-015	Clevis Pin, 1” x 2-7/8” UL	1
10	C520-195	Lock Bar Wing support	1
11	300-012	Lynch Pin, ¼”	1
12	C520-196	Link, Wing Support	1
13	C520-149	Wing Transport Pin	1
14	C520-168	Wing Cylinder Pin	1
15	C320-132	Wing Adjustment Assembly	1
16	257-054	Jam Nut, 1-1/4” UNC	2
17	255-020	Lockwasher, 1-1/4”	1
18	270-007	Locknut, ½” UNC	11
19	C520-144	Inner Wing Wheel Standard Mount Pin	1
20	273-006	Grease Nipple, Self Tap, ¼-28	2
21	256-011	Washer, ½” AS Type	9
22	250-060	Bolt, ½” x 1-3/4” UNC	2
23	C520-122	Wheel Standard, Right Wing	1
24	C520-145	Outer Wing Wheel Standard Mount Pin	1
25	C520-134	Skid mount Wing, FX520	1
26	250-201	Plow Bolt, ½” x 1-1/2” UNC	7
27	270-004	Locknut, 5/8” UNC	12
28	250-088	Bolt, 5/8” x 2-1/2” UNC	12
29	330-7023	Gearbox	1
30	341-6243	SFT Cone, 259 mm x 235 mm long	1
31	341-6242	SFT Cone, 252 mm x 210 mm long	2
32	256-020	Washer, 5/16”	12
33	255-015	Lockwasher, 5/16”	12
34	251-008	Bolt, M8 x 20 mm	12
35	330-7034	Gearbox	1
36	280-151	Plastic Access Cover	2
37	C520-155	Right Wing Assembly	1
38	362-010	Tension Bushing, 1” x 1-1/4” x ¾” Long	2
39	362-011	Tension Bushing, 1” x 1-1/4” x 1-1/2” Long	1
40	250-046	Bolt, ½” x 5” UNC GR5 Plated	2
41	256-012	Washer, ½” Plated SAE	2
42	C520-197	Spacer Block, 1”, Wing Transport	1
43	C502-136	Skid, Wing Outer Right	1
44	302-002	Clevis Pin, 1” x 3-1/8” UL	1

Компания ПоГус

HITCH FRAME

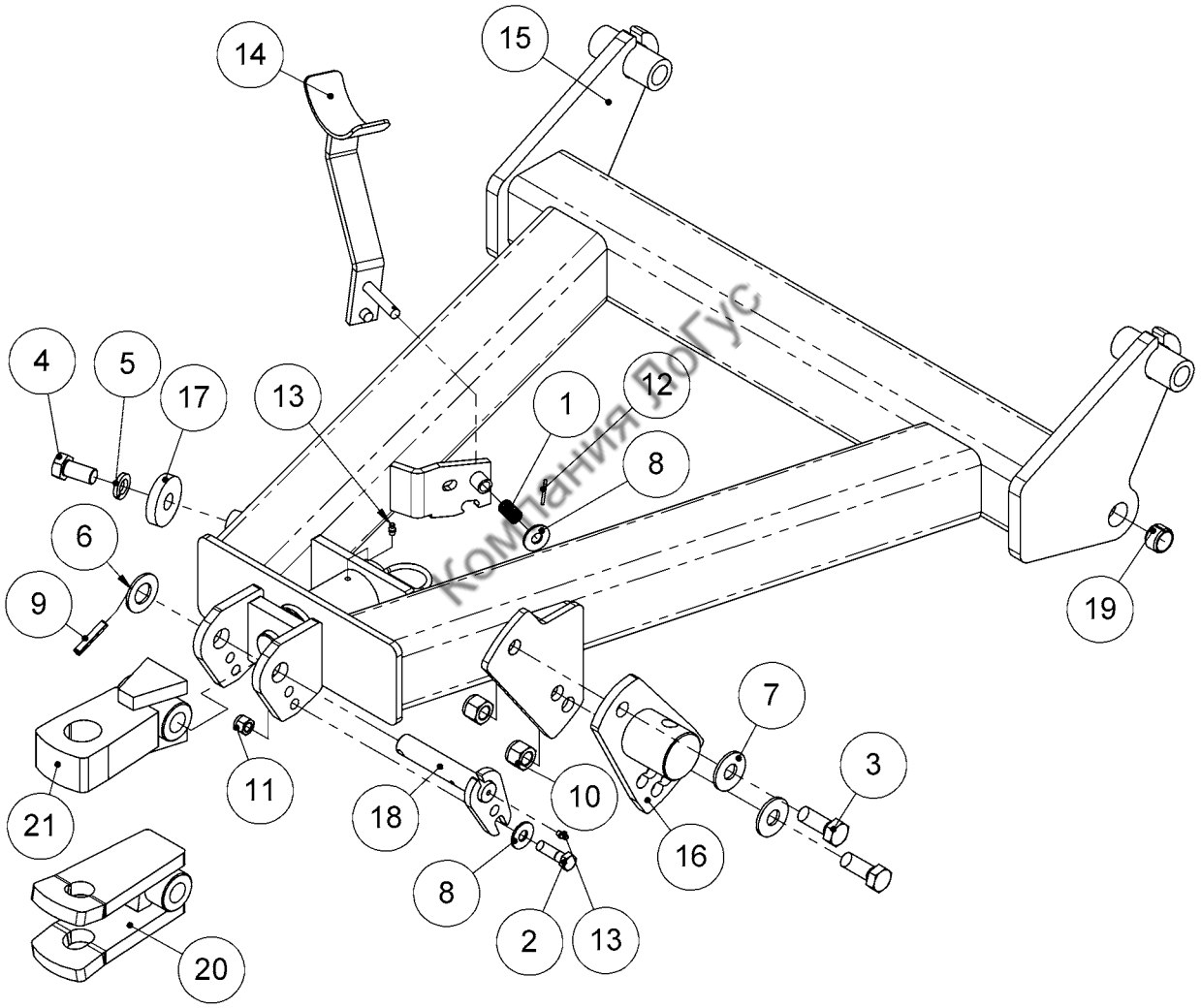

Компания ЛюГус

HITCH FRAME

Ref.	Part No.	Description	Qty
1	229-010	Compression Spring	1
2	250-060	Bolt, ½ x 1-3/4 UNC, GR5, Plated	1
3	250-114	Bolt, ¾ x 2 -1/2 UNC, GR5, Plated	2
4	250-116	Bolt, ¾ x 1-1/2 UNC, GR5, Plated	1
5	255-003	Lockwasher, ¾", Plated	1
6	256-001	Washer, 1", SAE, Plated	1
7	256-003	Washer, ¾, AS Type A, Plated	2
8	256-011	Washer, ½, AS Type A, Plated	2
9	262-006	Roll Pin, 3/8 x 2 Plated	1
10	270-001	Lock Nut, Nylon Insert, ¾" UNC, Plated	2
11	270-007	Lock Nut, Nylon Insert, ½" UNC, Plated	1
12	271-008	Cotter Pin, 1/8 x 1, Plated	1
13	273-006	Grease Nipple, Self-tap, ¼-28	2
14	C000-132	PTO Stand	1
15	C520-115	Hitch, CV	1
16	C520-117	Jack Mount, Adjustable	1
17	C520-118	Washer, 2-1/2" OD x 13/16" ID x ½"	1
18	CS01-134	Pin, 1" x 4-11/16" U.L.	1
19	362-010	Tension Bushing, 1" x 1-1/4" x 3/4"	4
20	C502-107	Open Clevis Hitch	1
21	C502-113	Tongue Hitch	1

Kowhawk Dor yc

PRECISION HITCH

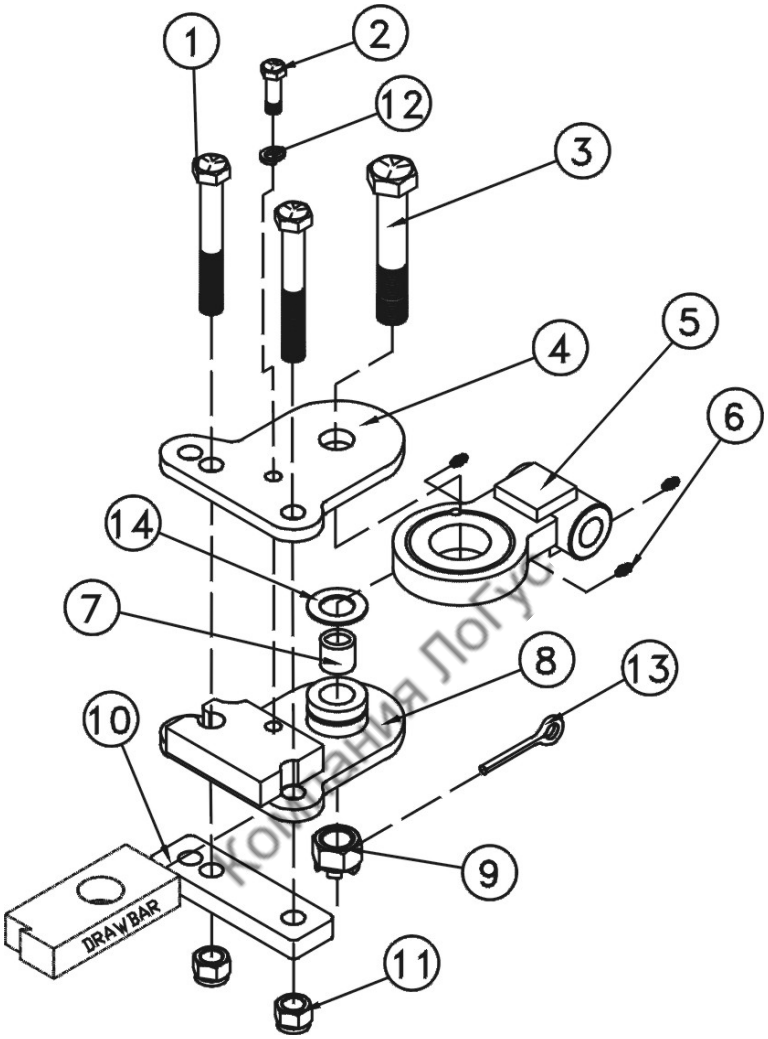

Ref.	Part No.	Description	Qty
1	250-109	Bolt, 3/4 x 5-1/2 UNC	2
2	250-059	Bolt, 1/2 x 1-1/2 UNC	1
3	C000-202	Bolt, 1-1/8 x 5-1/2 UNF	1
4	C000-303	Draw bar Clevis Top	1
5	C000-301	Hitch Tongue	1
6	273-001	Grease Nipple, 1/8 NPT	3
7	C000-305	Spacer	1
8	C000-302	Draw Bar Clevis Base	1
9	257-003	Lock Nut, 1-1/8 UNF	1
10	C000-304	Clamp Bar	1
11	270-001	Lock Nut, ¾ UNC	2
12	255-009	Lock Washer, 1/2	1
13	271-011	Cotter Pin, ¼ x 2-1/2	1
14	256-0712	Machine Bushing Spacer (Only Required if Hitch Tongue is Tight)	1

Компания ЛогГус

HITCH JACK (232-750)

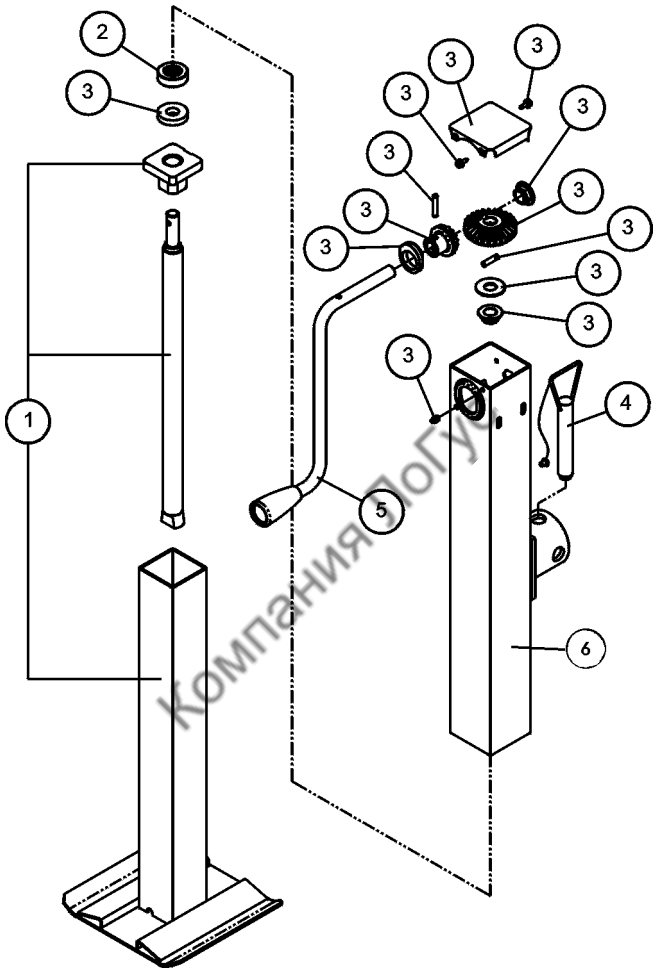

Компания ЛоГус

Ref.	Part No.	Description	Qty
1	232-751	Inner Tube, Screw and Nut Assembly	1
2	232-752	Thrust Bearing	1
3	232-753	Final Assembly Kit, Also Includes Ref # 2	1
4	232-754	Pull Pin Assembly, ¾”	1
5	232-755	Crank Assembly	1
6	232-757	Outer Tube and Mount	1

PARALLEL RING HITCH

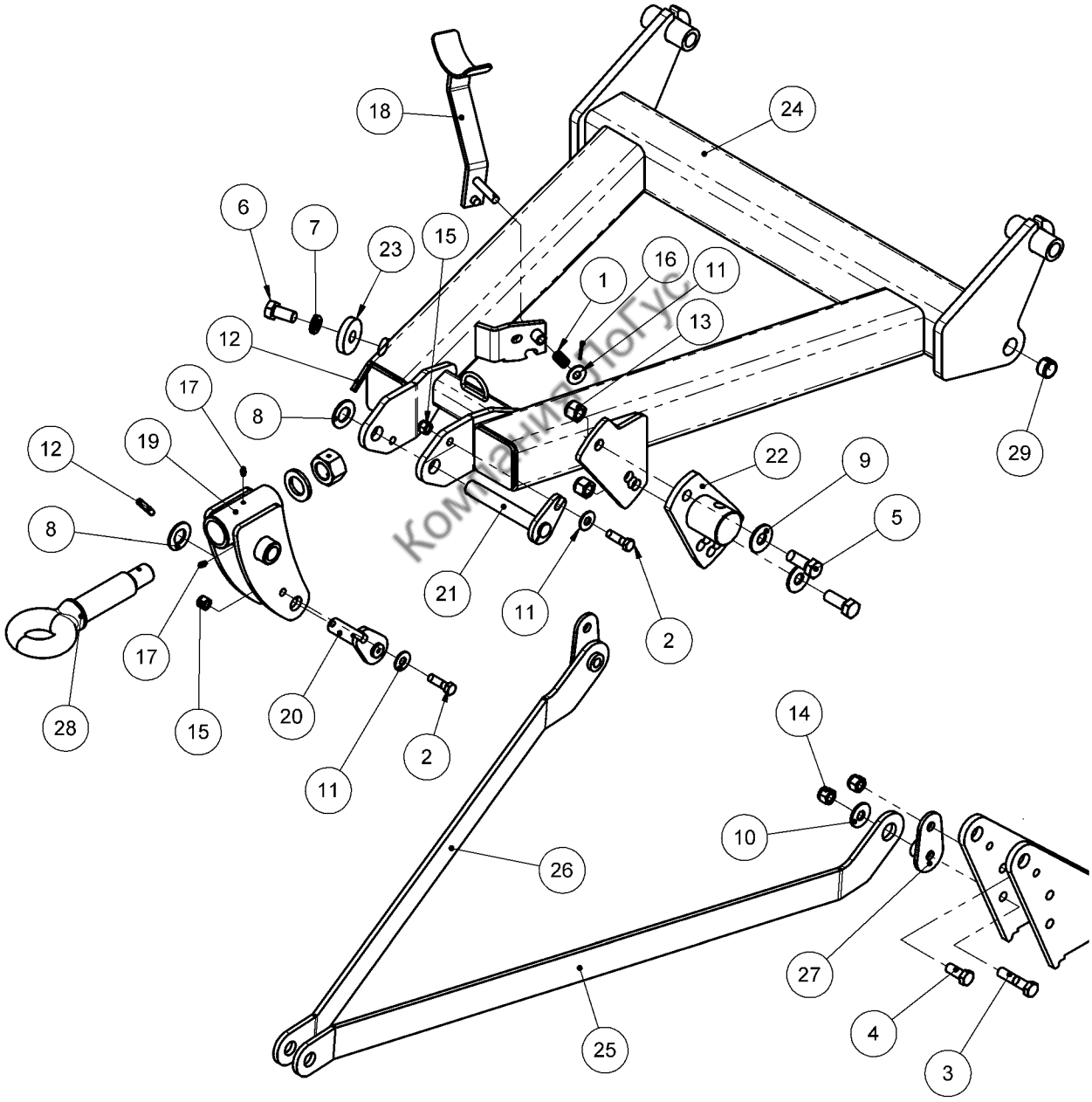

PARALLEL RING HITCH

Ref.	Part No.	Description	Qty
1	229-010	Compression Spring	1
2	250-060	BOLT, ½ X 1-3/4 UNC, GR5, Plated	2
3	250-087	Bolt, 5/8 x 3 UNC, GR5, Plated	2
4	250-093	Bolt, 5/8 x 1-3/4 UNC, GR5, Plated	2
5	250-114	Bolt, ¾ x 2 -1/2 UNC, GR5, Plated	2
6	250-116	Bolt, ¾ x 1-1/2 UNC, GR5, Plated	1
7	255-003	Lockwasher, ¾", Plated	1
8	256-001	Washer, 1", SAE, Plated	2
9	256-003	Washer, ¾, AS Type A, Plated	2
10	256-006	Washer, 5/8, AS Type A, Plated	2
11	256-011	Washer, ½, AS Type A, Plated	3
12	262-006	Roll Pin, 3/8 x 2 Plated	2
13	270-001	Lock Nut, Nylon Insert, ¾" UNC, Plated	2
14	270-004	Lock Nut, Nylon Insert, 5/8" UNC, Plated	4
15	270-007	Lock Nut, Nylon Insert, ½" UNC, Plated	2
16	271-008	Cotter Pin, 1/8 x 1, Plated	1
17	273-006	Grease Nipple, Self-tap, ¼-28	2
18	C000-132	PTO Stand	1
19	C312-182	Ring Holder	1
20	C312-187	Lower Pivot Pin	1
21	C312-188	Main Pivot Pin	1
22	C520-117	Jack Mount Adjustable	1
23	C520-118	Washer, 2-1/2" OD x 13/16" OD x ½	1
24	C520-181	Parallel Ring Hitch, Swivel Type	1
25	C520-182	Left Tie Rod	1
26	C520-183	Right Tie Rod	1
27	C520-184	Mount Tab	2
28	----------	Towing Eye, Complete (Supplied by Distributor)	1
29	362-010	Tension Bushing, 1" ID x 1-1/4" OD x 3/4" lg	2

Компания ПоТус

MAIN SHIELD ASSEMBLY

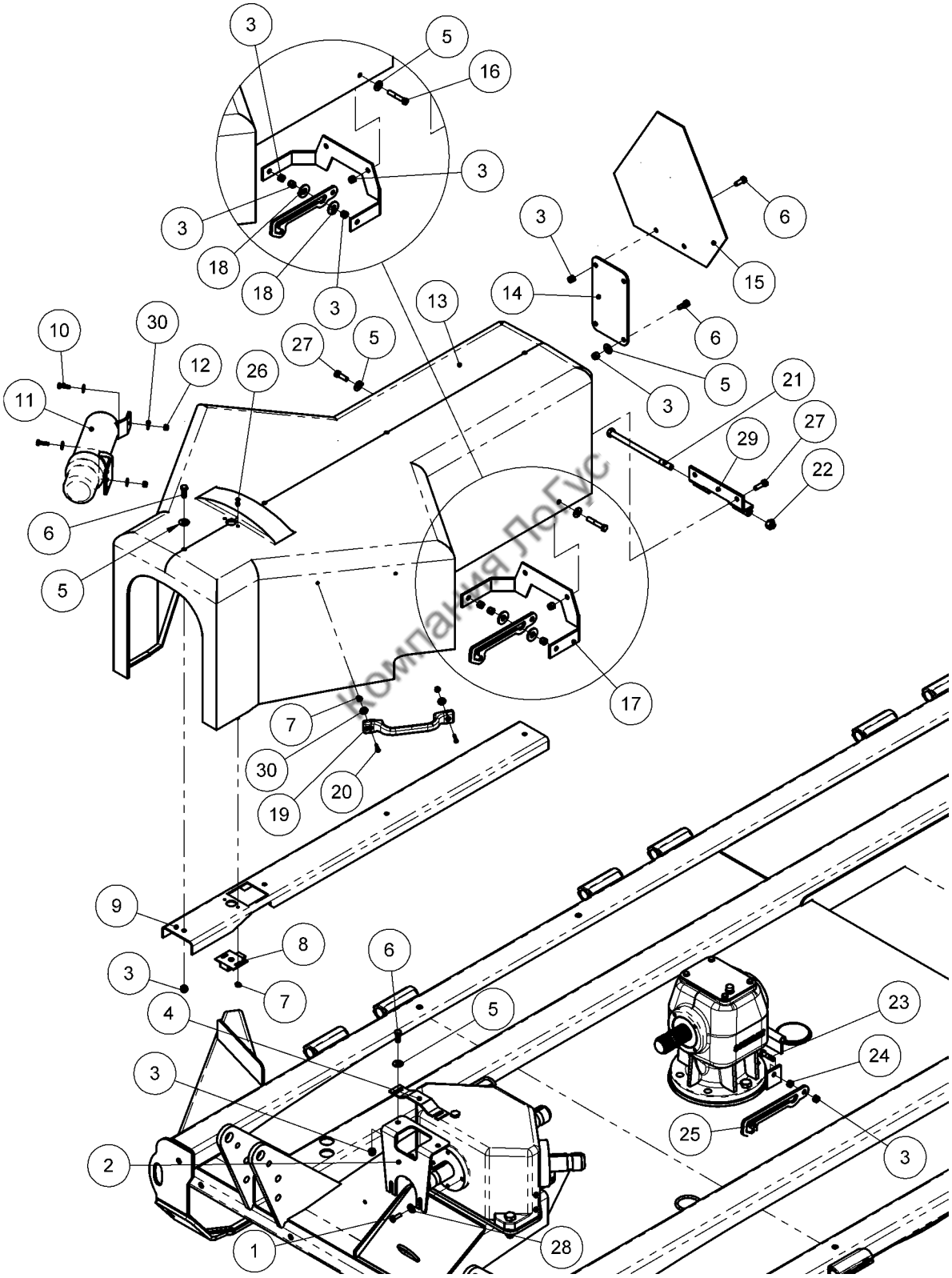

Компания ЛеГус

MAIN SHIELD ASSEMBLY

Ref.	Part No.	Description	Qty
1	251-0081	Bolt, M8 x 25 Plated GR5	2
2	C520-206	Lock Tab Mount Plate	1
3	270-017	Lock Nut, 3/8 UNC Plated	16
4	C520-207	Latch Tab	1
5	256-017	Washer, 3/8 Plated ASME Type A	10
6	250-019	Bolt, 3/8 x 1” UNC GR5 Plated	10
7	270-028	Locknut, 10-24, Nylock	4
8	227-001	Latch	1
9	C520-202	Shield Brace	1
10	250-002	Bolt, ¼” x 1” UNC Plated	2
11	280-201	Plastic Manual Storage Canister	1
12	270-025	Lock Nut, ¼” UNC Plated	2
13	C520-201	FX520 Main Shield	1
14	C520-205	SMV Mount	1
15	B601-125	SMV Sign	1
16	250-0251	Bolt, 3/8 x 2-1/4” UNC Full Threads Plated	1
17	C520-203	Shield Brace	1
18	256-011	Washer, ½” Plated ASME Type A	2
19	280-150	Plastic Handle	1
20	251-152	Machine Screw #10 x 1” Round Head	2
21	250-0455	Bolt, ½ x 8-1/2” UNC GR5 Plated	1
22	270-007	Lock Nut, ½” UNC Plated	1
23	250-020	Bolt, 3/8 x 1-1/2” UNC GR5 Plated	1
24	257-032	Nut, 3/8” UNC GR2 Plated	1
25	C520-208	Shield Lock Arm	1
26	251-151	Machine Screw #10 x .75” Round Head	2
27	250-019	Bolt, 3/8” x 1-1/4” UNC GR5 Plated	3
28	256-020	Washer, 5/16”	2
29	C520-204	Shield Hinge	1
30	256-018	Washer, ¼”	6

Компания ЛогГус

517 SINGLE/ DOUBLE AXLE

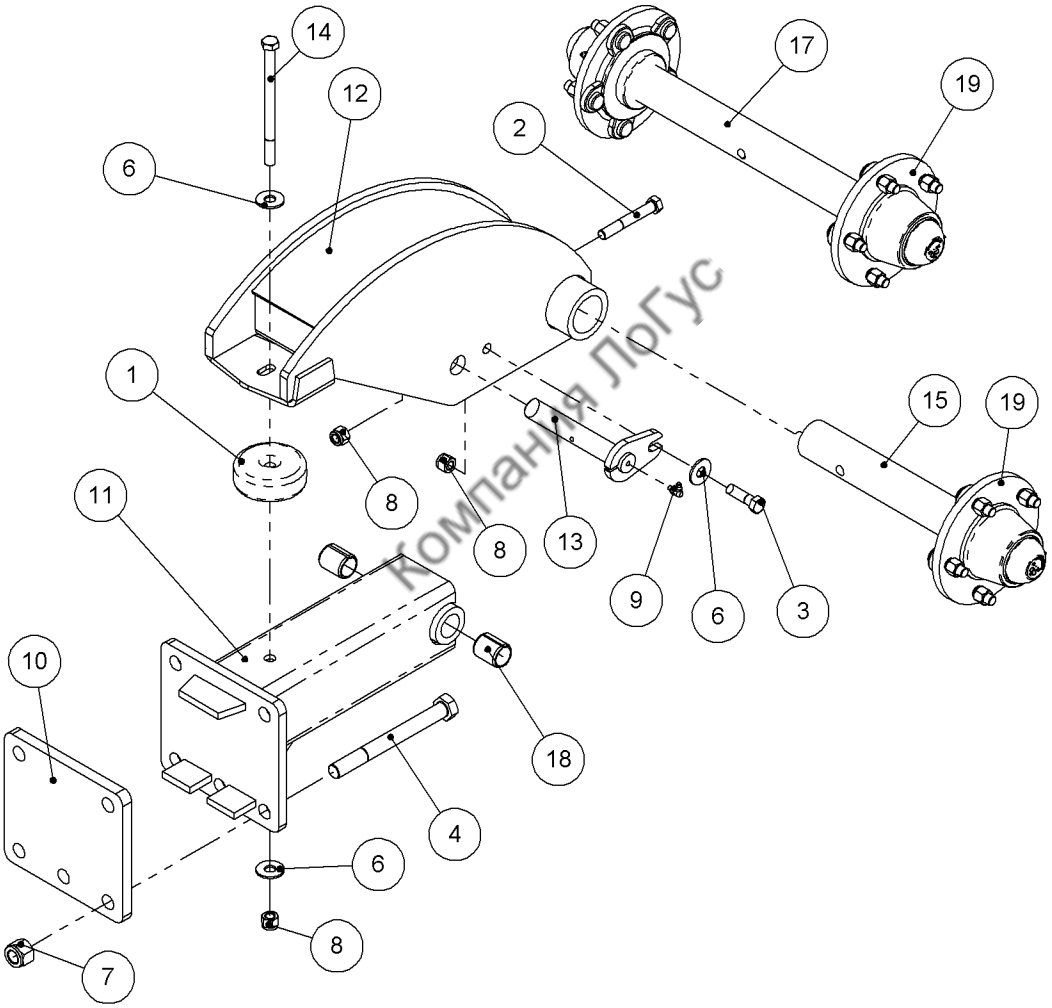

Компания ЛрГус

517 SINGLE/ DOUBLE AXLE

Ref.	Part No.	Description	Qty
1	233-053	Rubber Suspension Puck **(Center Only)**	1
	233-055	Rubber Suspension Puck **(Wings Only)**	1
2	250-050	Bolt, ½ x 3-1/2 UNC, GR5, Plated	1
3	250-060	Bolt, 1/2 x 1-3/4 UNC, GR5, Plated	1
4	250-105	Bolt, ¾ x 7-1/2 UNC, GR5, Plated	5
6	256-011	Washer, ½, AS Type A, Plated	3
7	270-001	Lock Nut, Nylon Insert, ¾" UNC, Plated	5
8	270-007	Lock Nut, Nylon Insert, ½" UNC, Plated	3
9	273-011	Grease Nipple, Self-tap, ¼-28	1
10	C520-316	Mount Plate	1
11	C520-123	Wheel Arm	1
12	C520-124	Rigid Wheel Mount	1
13	C520-146	Wheel Standard Mount Pin	1
14	250-0452	Bolt, ½ x 7 UNC, GR5, Plated	1
15	208-031	517 Spindle, 2"Dia x 15-1/8" Long	1
17	208-030	517 Spindle, Double, 2"Dia x 24-1/8" Long	1
18	362-011	Tension Bushing, 1" x 1-1/4" x 1-1/2"	2
19	206-013	517 Hub, Complete	AR

Компания ПрТУС

618 SINGLE AXLE

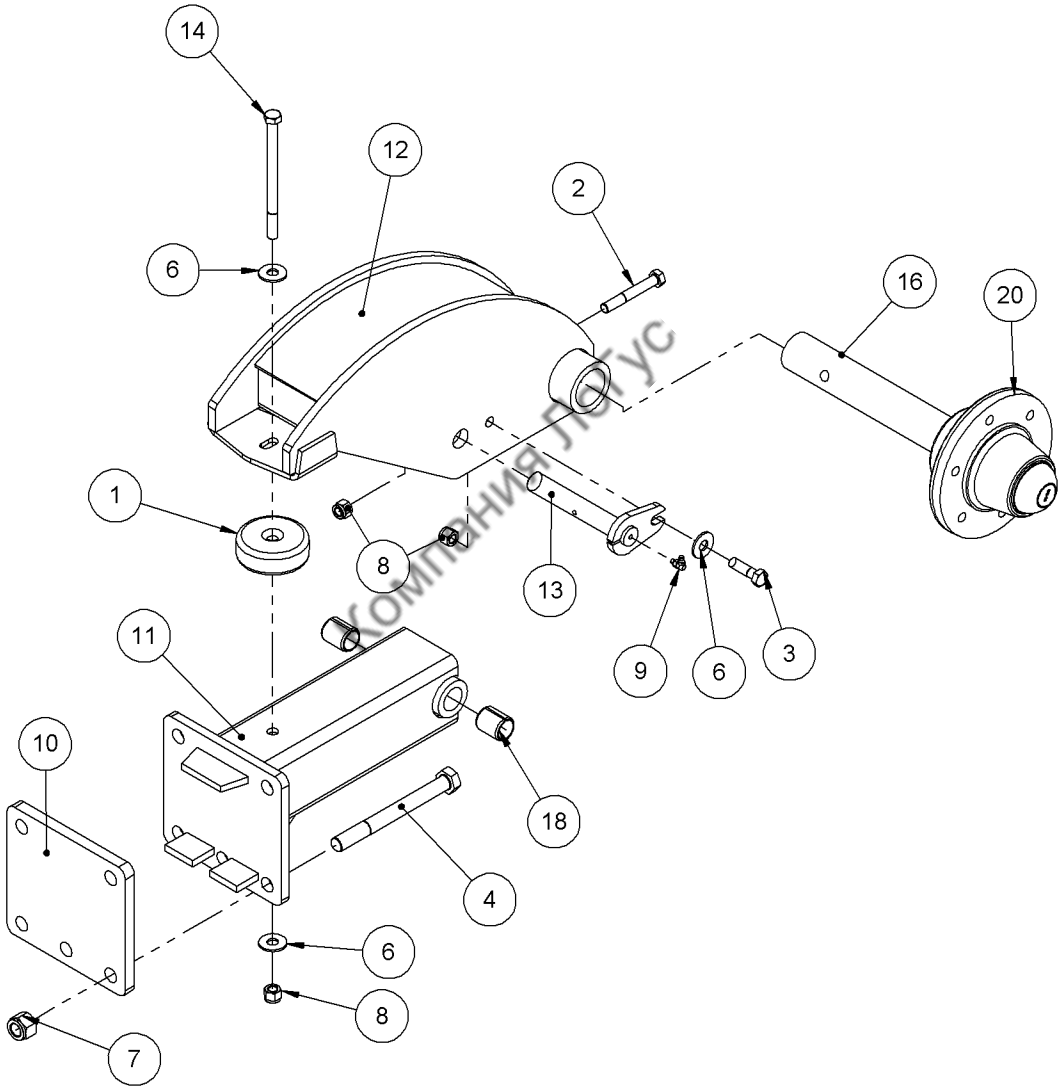

Компания Лигус

618 SINGLE AXLE

NOTE: The wheel arms used with the 618 wheel hubs are not symmetrical for the center section.

The wheel arm tube will be marked with an "R" for the right, and an "L' for the left.

Ref.	Part No.	Description	Qty
1	233-053	Rubber Suspension Puck **(Center Only)**	1
	233-055	Rubber Suspension Puck **(Wings Only)**	1
2	250-050	Bolt, ½ x 3-1/2 UNC, GR5, Plated	1
3	250-060	Bolt, 1/2 x 1-3/4 UNC, GR5, Plated	1
4	250-105	Bolt, ¾ x 7-1/2 UNC, GR5, Plated	5
6	256-011	Washer, ½, AS Type A, Plated	3
7	270-001	Lock Nut, Nylon Insert, ¾" UNC, Plated	5
8	270-007	Lock Nut, Nylon Insert, ½" UNC, Plated	3
9	273-011	Grease Nipple, Self-tap, ¼-28	1
10	C520-316	Mount Plate	1
11	C520-190	Wheel Arm, Right Center Section	1
	C520-191	Wheel Arm, Left Center Section	1
	C520-123	Wheel Arm, Right Wing	1
	C520-123	Wheel Arm, Left wing	1
12	C520-124	Rigid Wheel Mount	1
13	C520-146	Wheel Standard Mount Pin	1
14	250-0452	Bolt, ½ x 7 UNC, GR5, Plated	1
16	208-029	618 Spindle, 16-7/8" Long	1
18	362-011	Tension Bushing, 1" x 1-1/4" x 1-1/2"	2
20	206-003	618 Hub, complete	1

KOMFORT TOOLS

FX520-517 WALKING AXLE

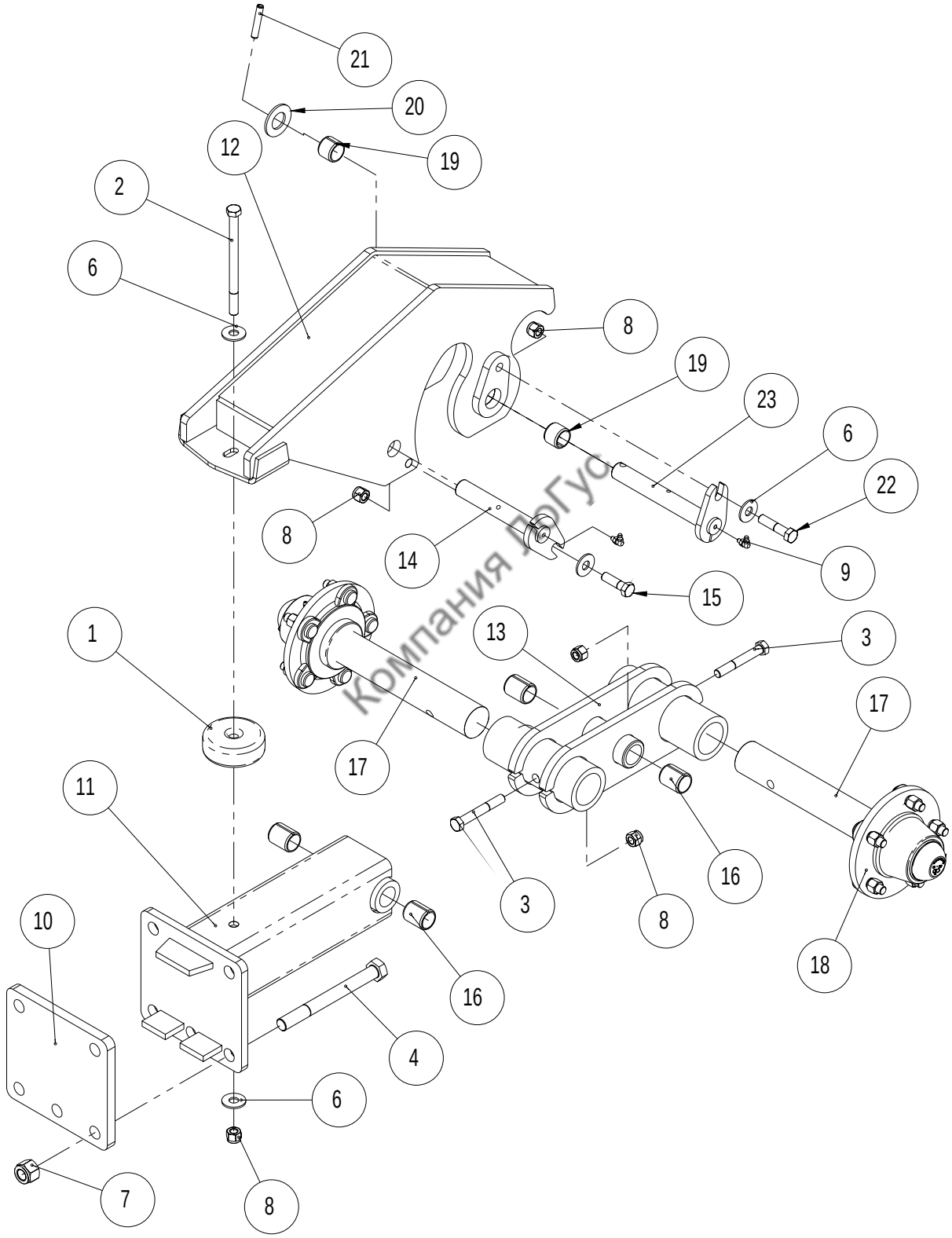

Компания ЛорГус

© 2007 Alamo Group Inc.

FX520-517 WALKING AXLE

NOTE: Install the walking axles so the outside tire is the leading tire.

Ref.	Part No.	Qty	Description
1	233-053	1	Rubber Suspension Puck (Center Only)
	233-055	1	Rubber Suspension Puck (Wings Only)
2	250-0452	1	Bolt, 1/2 x 7 UNC, GR5, Plated
3	250-050	2	Bolt, 1/2 x 3-1/2 UNC, GR5, Plated
4	250-105	5	Bolt, 3/4 x 7-1/2 UNC GR5, plated
6	256-011	4	Washer, 1/2, AS Type A, Plated
7	270-001	5	Locknut, 3/4 UNC, plated
8	270-007	5	Locknut, 1/2 UNC, plated
9	273-011	2	Grease nipple, self tap, 1/4-28, 90 degree
10	C520-316	1	Mount Plate
11	C520-123	1	Wheel Standard Arm
12	C520-119	1	Walking Axle Wheel Mount
13	C520-126	1	Walking Axle
14	C520-146	1	Wheel Standard Mount Pin
15	250-060	1	Bolt, 1/2 x 1-3/4 UNC, GR5, Plated
16	362-011	4	Tension bushing, 1"x 1-1/4" x 1-1/2" lg.
17	208-031	2	517 Spindle, 15-1/8" x 2", Bolt Hole
18	206-013	2	517 Hub, Complete
19	362-015	2	Tension Bushing, 1" x 1-1/4" x 1" Long
20	256-001	1	Washer, 1"
21	262-006	1	Roll Pin, 3/8 x 2"
22	250-0542	1	Bolt, 1/2 x 2-1/4" UNC
23	C520-158	1	Pin, 1" x 6-5/8" Greasable

Компания ЛОГУС

© 2007 Alamo Group Inc.

HUB AND TIRES, 517

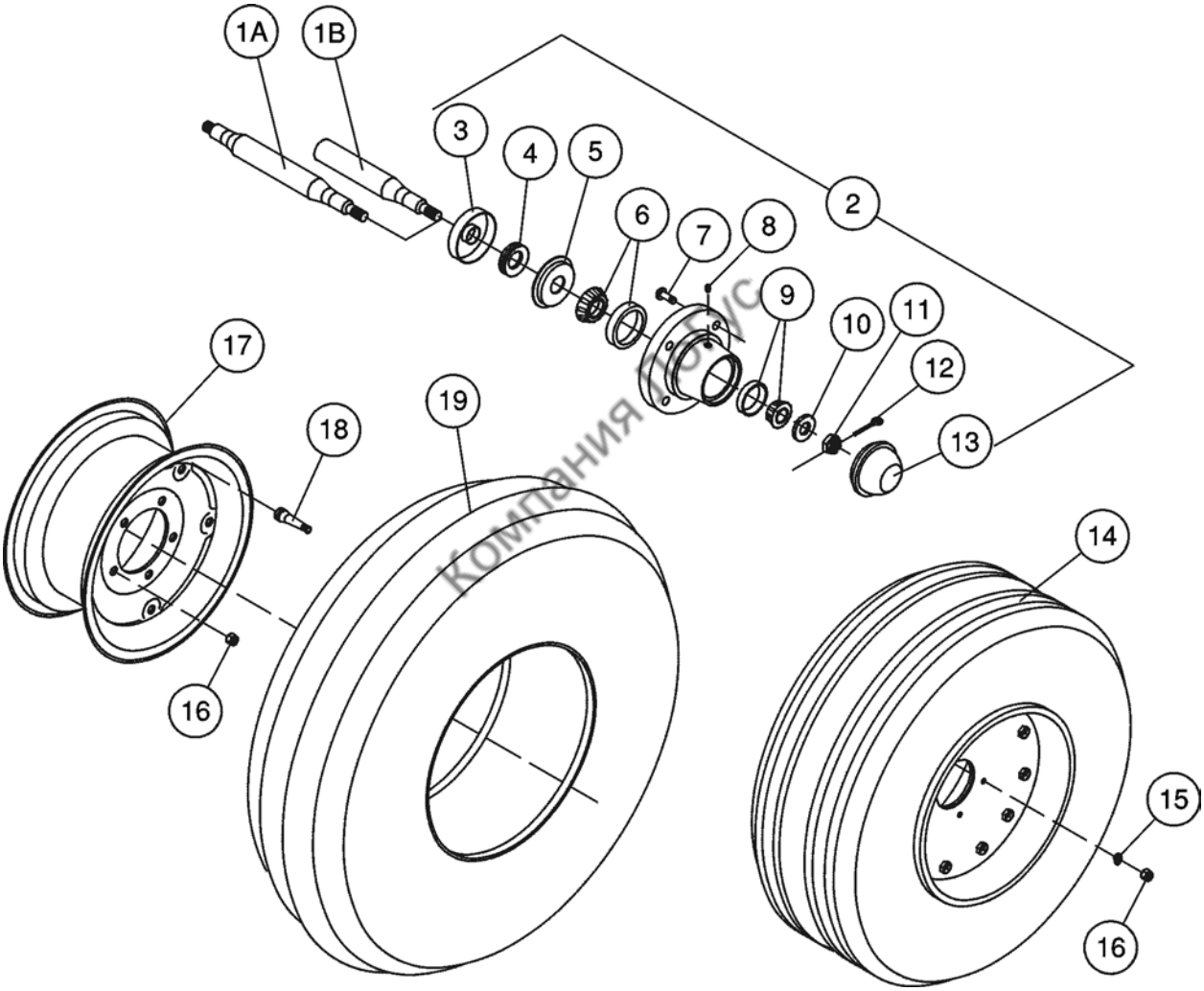

Компания ПОРУС

HUB AND TIRES, 517

NOTE: When mounting aircraft tires, the wheel nut must be installed with the flat side seated against the rim. Use a lockwasher in the aircraft tire application.

Ref.	Part No.	Description	Qty
1A	208-030	517 Spindle, Dble, 2” dia x 24-1/8”	1
1B	208-031	517 Spindle, 2” dia x 15-1/8”	1
2	206-013	517 Hub, complete	1
3	207-063	Seal Retainer	1
4	207-062	V-seal	1
5	207-064	Seal Counter Face	1
6	207-015C	Cup & Cone	1
7	207-043	Wheel Stud Bolt	5
8	273-006	Grease Fitting	1
9	207-019C	Cup & Cone	1
10	209-003	Washer	1
11	209-004	Hex Nut	1
12	271-005	Cotter Pin	1
13	207-022	Dust Cap	1
14	210-180	Aircraft Tire, 30 x 9.5 x 14 **Complete**	1
	210-181	Tire Only, 30 x 9.5 x 14	
	211-015	Tube & Liner Only	
	201-018	Rim Only, Both Halves 14”	
15	255-009	Lockwasher, ½”	5
16	207-023	Wheel Nut	5
17	201-005	Rim, 15 x 6 x 5	1
18	211-002	Valve Stem	1
19	210-167	Tire, 7.00 x 15, 8 ply light truck	1
20A	203-003	517 Hub & Spindle, Dble Ended, 24-1/8” Long	1
20B	203-004	517 Hub & Spindle, Complete, 15-1/8” Long	1

Компания ЛоГус

HUB AND TIRES, 618

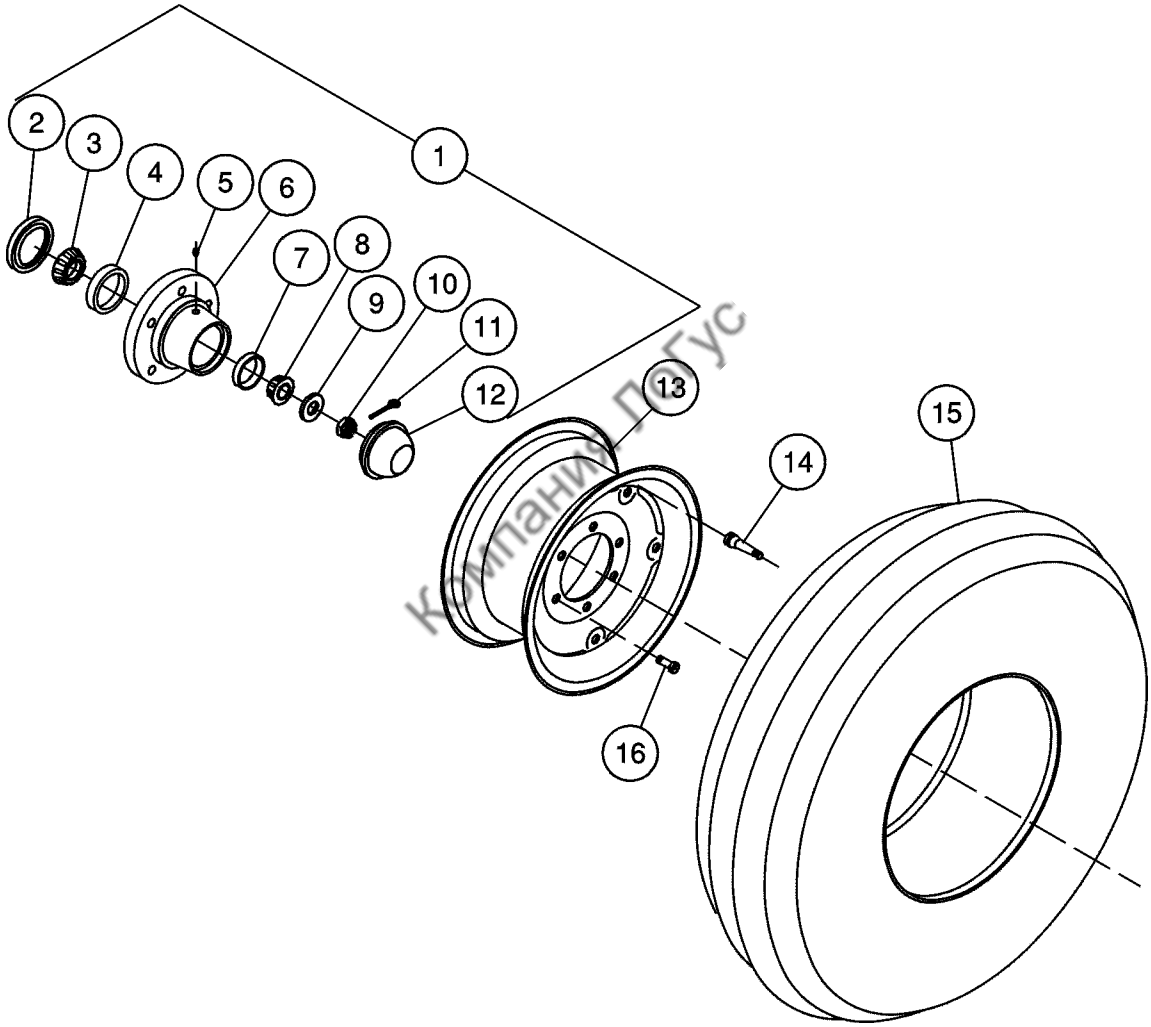

Компания ПеГус

HUB AND TIRES, 618

Ref.	Part No.	Description	Qty
1	206-003	618 Hub, complete	1
2	207-018	Seal	1
3	207-013	Bearing, Inner	1
4	207-014	Race, Inner	1
5	273-006	Grease Zerk	1
6	205-003	Hub, with races (ref#4, 6, 7)	1
7	207-016	Race, Outer	1
8	207-015	Bearing, Inner	1
9	209-010	Washer	1
10	209-011	Castle Nut, 1-14 UNS	1
11	209-012	Cotter Pin	1
12	207-017	Dust Cap	1
13	201-002	Rim, 15 x 8 x 6	1
14	211-002	Valve Stem	1
15	210-170	Tire, 11L x 15, 8 ply	1
16	207-010	Wheel Bolt, 9/16” x 1-1/16” UNF	6
17	208-029	618 Spindle, 16-7/8” Long (not shown)	1

Компания ПоГус

BLADE CARRIERS

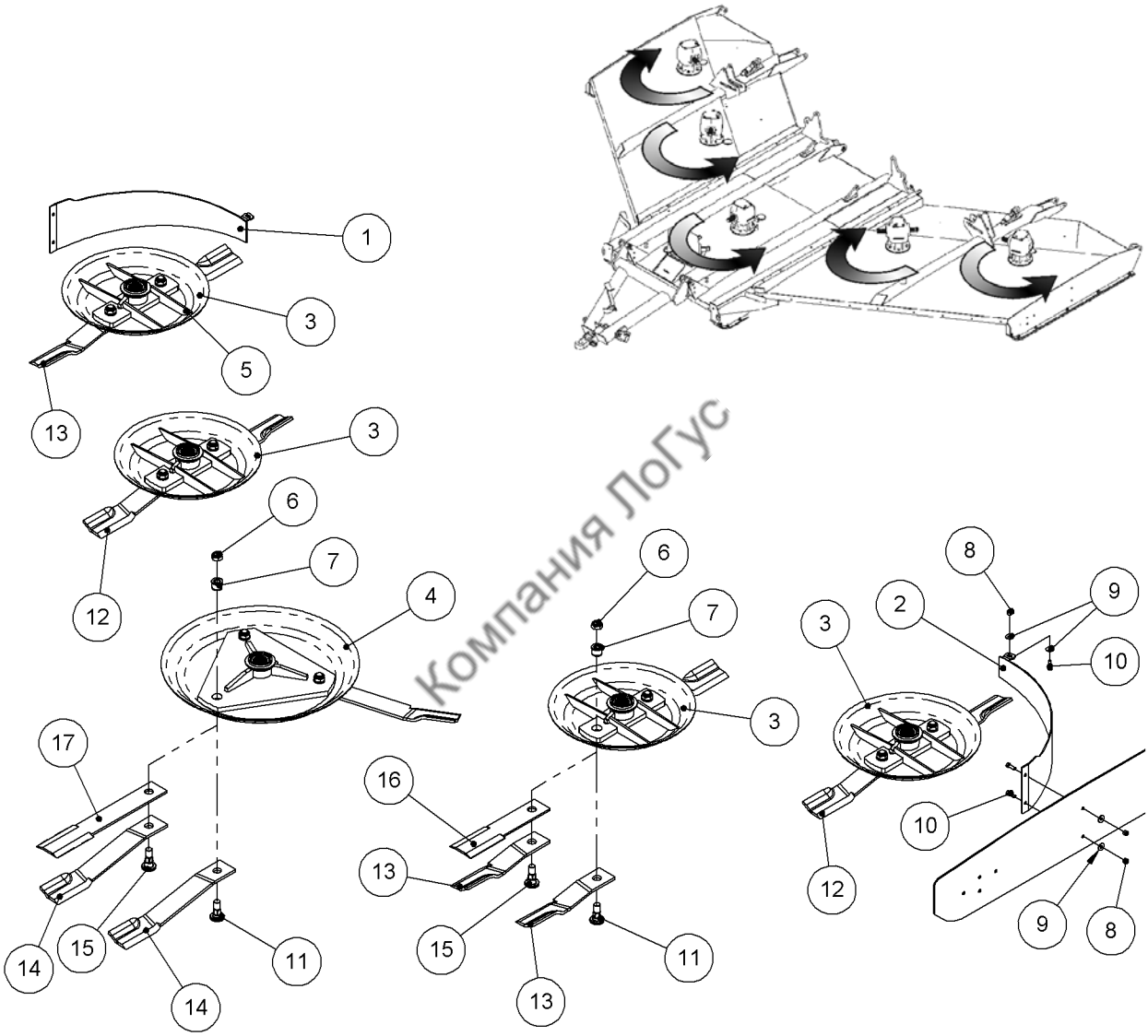

Компания ЛоГус

BLADE CARRIERS

C520-250 Pans With Updraft Blades & Shrouds

Ref.	Part No.	Description	Qty
1	C520-252	Outside Shroud, Right Wing	1
2	C520-251	Outside Shroud, Left Wing	1
3	C303-207	Pan, 4’, 2 Blade, 7 Ga, LF223	4
4	C303-213	Pan, 6’, 3 Blade, 7 Ga, LF223	1
5	586-852	Replacement Brace	AR
6	257-003	Lock Nut, 1-1/8-12 UNF, Nylon Insert, Gr 8	11
7	251-020	Pentagon Bushing Replacement	AR
8	270-007	Lock Nut, Nylon Insert, ½” UNC, Plated	6
9	256-011	Washer, ½, AS Type A, Plated	8
10	250-059	Bolt, ½ x 1-1/2 UNC, Gr 5, Plated	6
11	251-018	Blade Bolt, Pentagon Shoulder, ½”	11
12	401-067	Blade, ½” x 4” x20-1/4” Updraft CCW	4
13	401-066	Blade, ½” x 4” x20-1/4” Updraft CW	4
14	401-028	Blade, ½” x 4” x 28”, Updraft CCW	3

Компания ПоГУС

C520-260 Pans With Shredder Blades & Shrouds

Ref.	Part No.	Description	Qty
1	C520-252	Outside Shroud, Right Wing	1
2	C520-251	Outside Shroud, Left Wing	1
3	C303-207	Pan, 4’, 2 Blade, 7 Ga, LF223	4
4	C303-213	Pan, 6’, 3 Blade, 7 Ga, LF223	1
5	586-852	Replacement Brace	AR
6	257-003	Lock Nut, 1-1/8-12 UNF, Nylon Insert, Gr 8	11
7	251-020	Pentagon Bushing Replacement	11
8	270-007	Lock Nut, Nylon Insert, ½” UNC, Plated	6
9	256-011	Washer, ½, AS Type A, Plated	8
10	250-059	Bolt, ½ x 1-1/2 UNC, Gr 5, Plated	6
12	401-067	Blade, ½” x 4” x 20-1/4” Updraft CCW	4
13	401-066	Blade, ½” x 4” x 20-1/4” Updraft CW	4
14	401-028	Blade, ½” x 4” x 28, Updraft CCW	3
15	251-019	Blade Bolt, Pentagon Shoulder, 7/8”	11
16	401-065	Blade, 3/8” x 4” x20-1/4” Double Edge	8
17	401-034	Blade, 3/8” x 4” x28” Straight	3

FIXED KNIFE KIT - BLADES

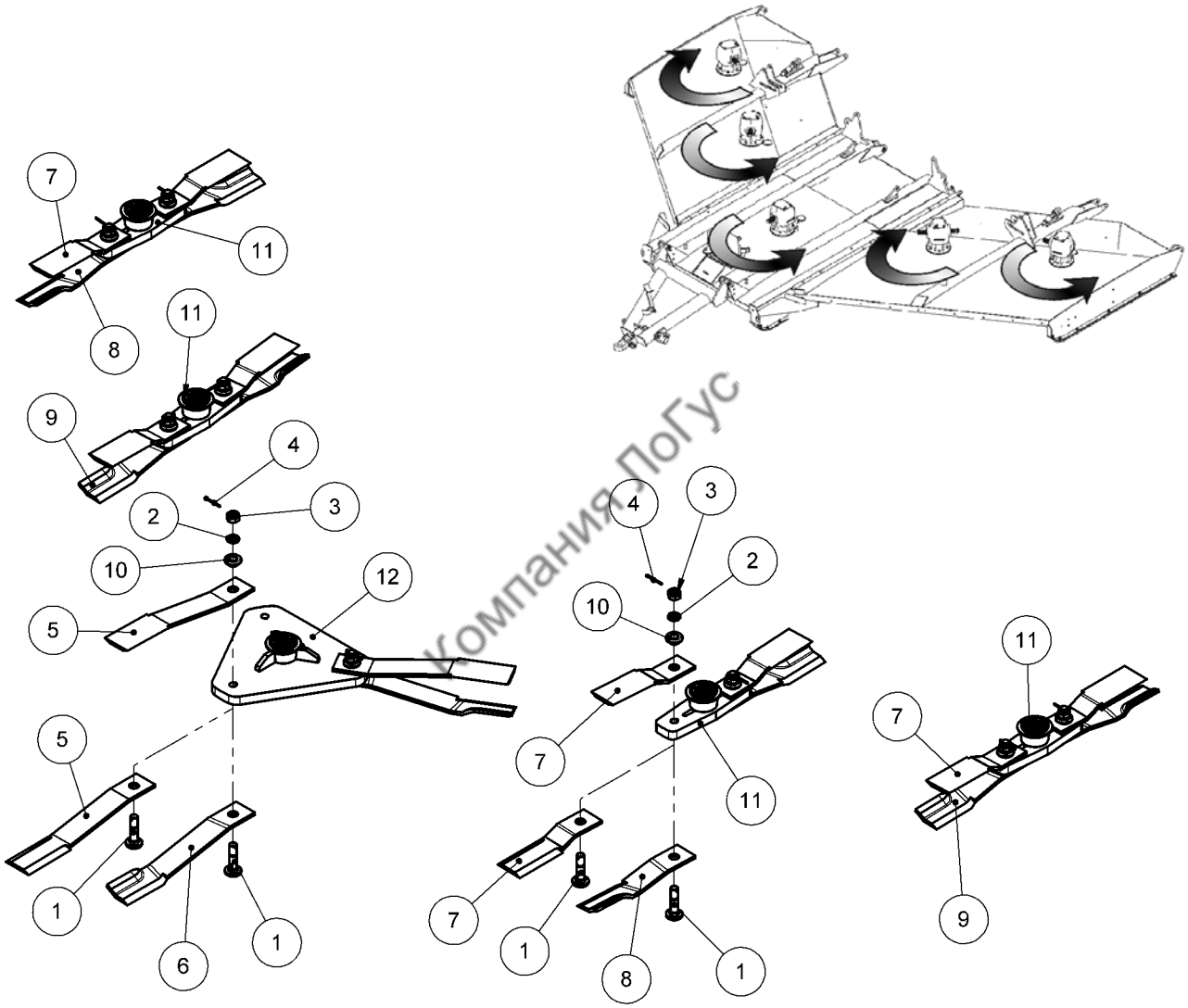

Компания ЛоГус

FIXED KNIFE KIT - BLADES

C520-270 Updraft Blades, Grass Seed Kit
C520-290 Updraft Blades, Cotton Kit

Ref.	Part No.	Description	Qty
1	251-016	Bolt, ½ Fixed Shredder Blade 1-1/8-12 UNF	11
2	255-021	Lock Washer, 1-1/8”, Plated ANS Helical Spring Type	11
3	257-107	Castle Nut, 1-1/8-12 UNF, GR5, Plated	11
4	271-011	Cotter Pin, ¼” x 2-1/2”, Plated	11
5	401-024	Blade, Mower, ½ x 4 x 28, Double Edge	3
6	401-028	Blade, ½” x 4” x 28, Updraft CCW	3
7	401-064	Blade, ½” x 4” x 20-1/4” Double Edge	8
8	401-066	Blade, ½” x 4” x 20-1/4” Updraft CW	4
9	401-067	Blade, ½” x 4” x 20-1/4” Updraft CCW	4
10	C000-201	Sleeve, 1.125 ID, Shredder Kit	11
11	C303-214	Shredder Bar 4FT	4
12	C303-219	Shredder Bar 6FT Tri-Blade	1

Компания ЛЮКС

C520-280 Double Edge Blades, Grass Seed Kit
C520-295 Double Edge Blades, Cotton Kit

Ref.	Part No.	Description	Qty
1	251-016	Bolt, ½ Fixed Shredder Blade 1-1/8-12 UNF	11
2	255-021	Lock Washer, 1-1/8”, Plated ANS Helical Spring Type	11
3	257-107	Castle Nut, 1-1/8-12 UNF, GR5, Plated	11
4	271-011	Cotter Pin, ¼” x 2-1/2”, Plated	11
5	401-024	Blade, Mower, ½ x 4 x 28, Double Edge	6
7	401-064	Blade, ½” x 4” x 20-1/4” Double Edge	16
10	C000-201	Sleeve, 1.125 ID, Shredder Kit	11
11	C303-214	Shredder Bar 4FT	4
12	C303-219	Shredder Bar 6FT Tri-Blade	1

FIXED KNIFE KIT – KNIFE MOUNTS

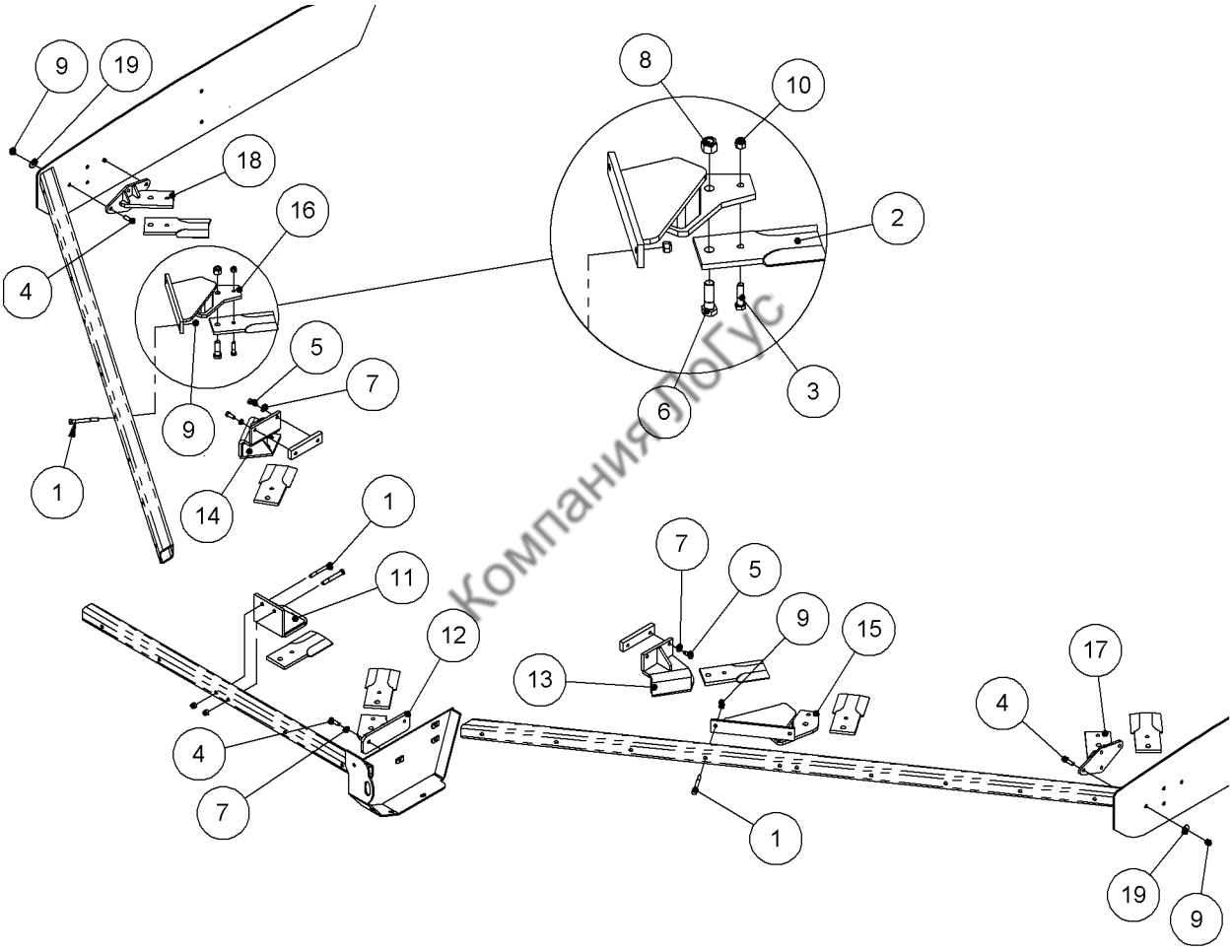

Компания ЮгГус

FIXED KNIFE KIT – FIXED KNIFE MOUNTS

Ref.	Part No.	Description	Qty
1	250-047	Bolt, ½ x 4-1/2, UNC, GR5, Plated	6
2	401-206	Blade, ½ x 4 x 10 Fixed Double Edge	8
3	250-0571	Bolt, ½ x 2, UNF, GR5, Plated	8
4	250-059	Bolt, ½ x 1-1/2, UNC, GR5, Plated	12
5	250-061	Bolt, ½ x 1-1/4, UNC, GR5, Plated	4
6	250-1141	Bolt, 3/4 x 2-1/2, UNF, GR5, Plated	8
7	255-009	Lockwasher, ½" Plated ANS Helical Spring Type	8
8	270-0012	Lock Nut, Nylon Insert, ¾" UNF, Plated	8
9	270-007	Lock Nut, Nylon Insert, 1/2" UNC, Plated	14
10	270-0081	Lock Nut, Nylon Insert, ½" UNF, Plated	8
11	C520-281	Knife Mount, Center	1
12	C520-282	Left Knife Mount, Center	1
13	C520-283	Inner Knife Mount, Left Wing	1
14	C250-284	Inner Knife Mount, Right Wing	1
15	C520-285	Front Knife Mount, Left Wing	1
16	C520-286	Front Knife Mount, Right Wing	1
17	C520-287	Outer Knife Mount, Left Wing	1
18	C520-288	Outer Knife Mount, Right Wing	1
19	256-011	Washer, ½, AS Type A, Plated	8

Kompanion Polyc

FIXED KNIFE KIT – GRASS SEED SHROUDS

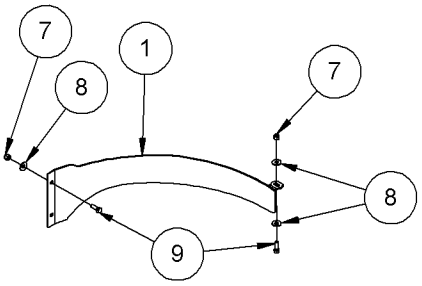

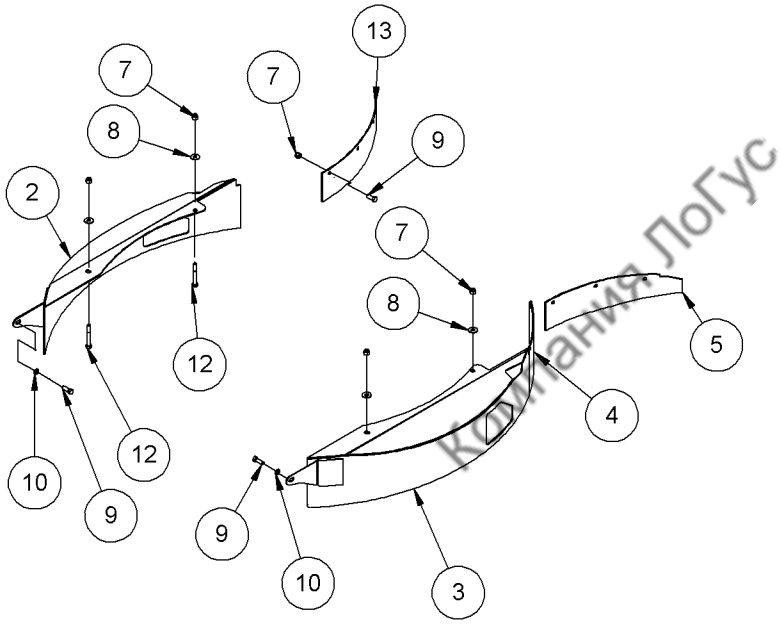

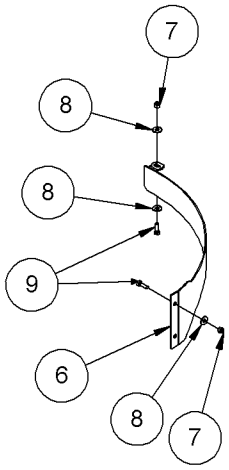

Компания ЛоГус

Ref.	Part No.	Description	Qty
1	C520-277	Outside Shroud, Right Wing	1
2	C520-272	Right Shroud, Center Section	1
3	C520-271	Left Shroud, Center Section	1
4	C520-297	Rear Shroud, Center Section	1
5	C520-273	Left Rear Shroud, Center Section	1
6	C520-276	Outside Shroud, Left Wing	1
7	270-007	Lock Nut, Nylon Insert, 1/2” UNC, Plated	16
8	256-011	Washer, 1/2, AS Type A, Plated	12
9	250-059	Bolt, ½ x 1-1/2, UNC, GR5, Plated	14
10	255-009	Lockwasher, ½” Plated ANS Helical Spring Type	2
12	250-053	Bolt, ½ x 3-3/4”, UNC, GR5, Plated	4
13	C520-274	Right Rear Shroud, Center Section	1

FIXED KNIFE KIT – COTTON SHROUDS

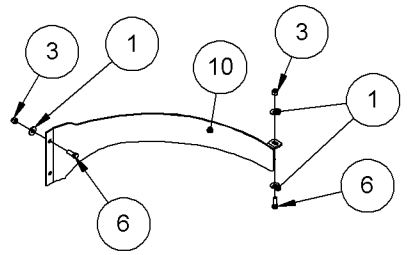

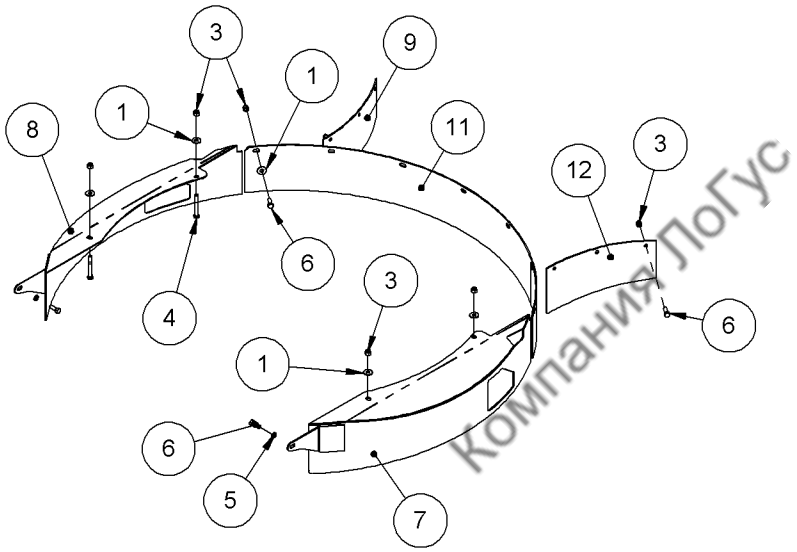

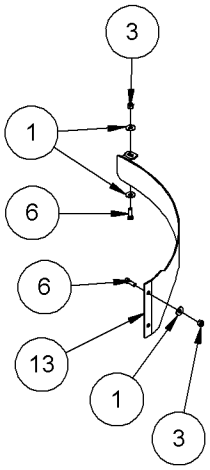

Компания ЛоГус

Ref.	Part No.	Description	Qty
1	256-011	Washer, ½”	19
3	270-007	Locknut, ½” UNC	23
4	250-053	Bolt, ½ x 3-3/4” UNC	4
5	255-009	Lockwasher, ½”	2
6	250-059	Bolt, ½” x 1-1/2” UNC	21
7	C520-271	Left Shroud, Center Section	1
8	C520-272	Right Shroud, Center Section	1
9	C520-293	Right Rear Shroud, Center Section	1
10	C520-277	Outside Shroud, Right Wing	1
11	C520-296	Rear Shroud, Center Section	1
12	C520-292	Left Rear Shroud, Center Section	1
13	C520-276	Outside Shroud, Left Wing	1

FX520-FIXED KNIFE KIT- CORN & STRAW SHROUDS

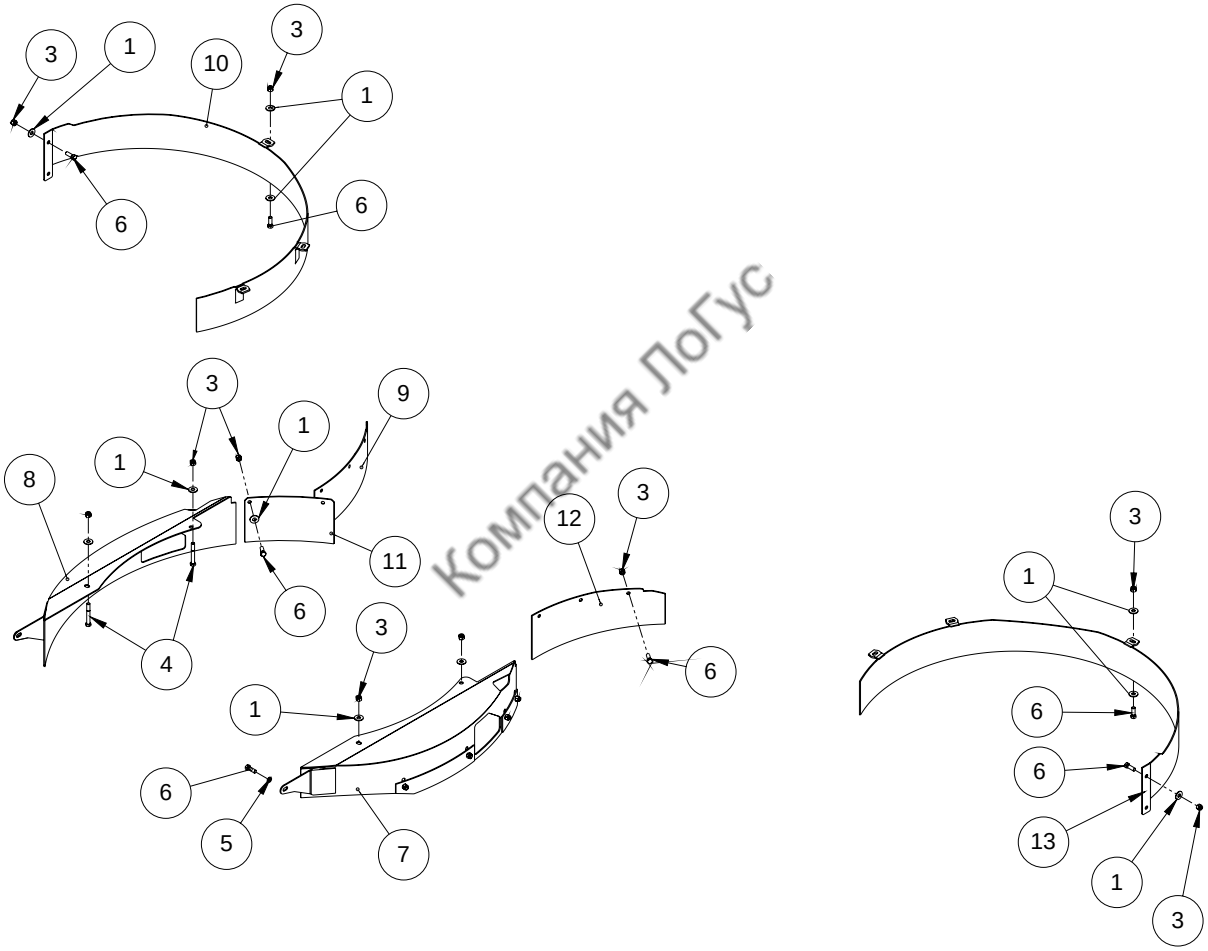

Компания ЛоГус

© 2007 Alamo Group Inc.

FX520-FIXED KNIFE KIT- CORN & STRAW SHROUDS

Ref.	Part No.	Qty	Description
1	256-011	19	Washer, 1/2"
3	270-007	24	Locknut, 1/2 UNC
4	250-053	4	Bolt, 1/2 x 3-3/4" UNC
5	255-009	2	Lockwasher, 1/2"
6	250-059	20	Bolt, 1/2 x 1-1/2" UNC
7	C520-278	1	Left Shroud, Center Section
8	C520-272	1	Center Shroud, Right
9	C520-244	1	Right Rear Shroud, Center Deck
10	C520-299	1	Shroud, Outer Right Wing
11	C520-297	1	Rear Shroud, Center Deck
12	C520-243	1	Left Rear Shroud, Center Deck
13	C520-298	1	Shroud, Outer Left Wing

Компания ЛюГус

© 2007 Alamo Group Inc.

FX520-CHAIN GUARDS

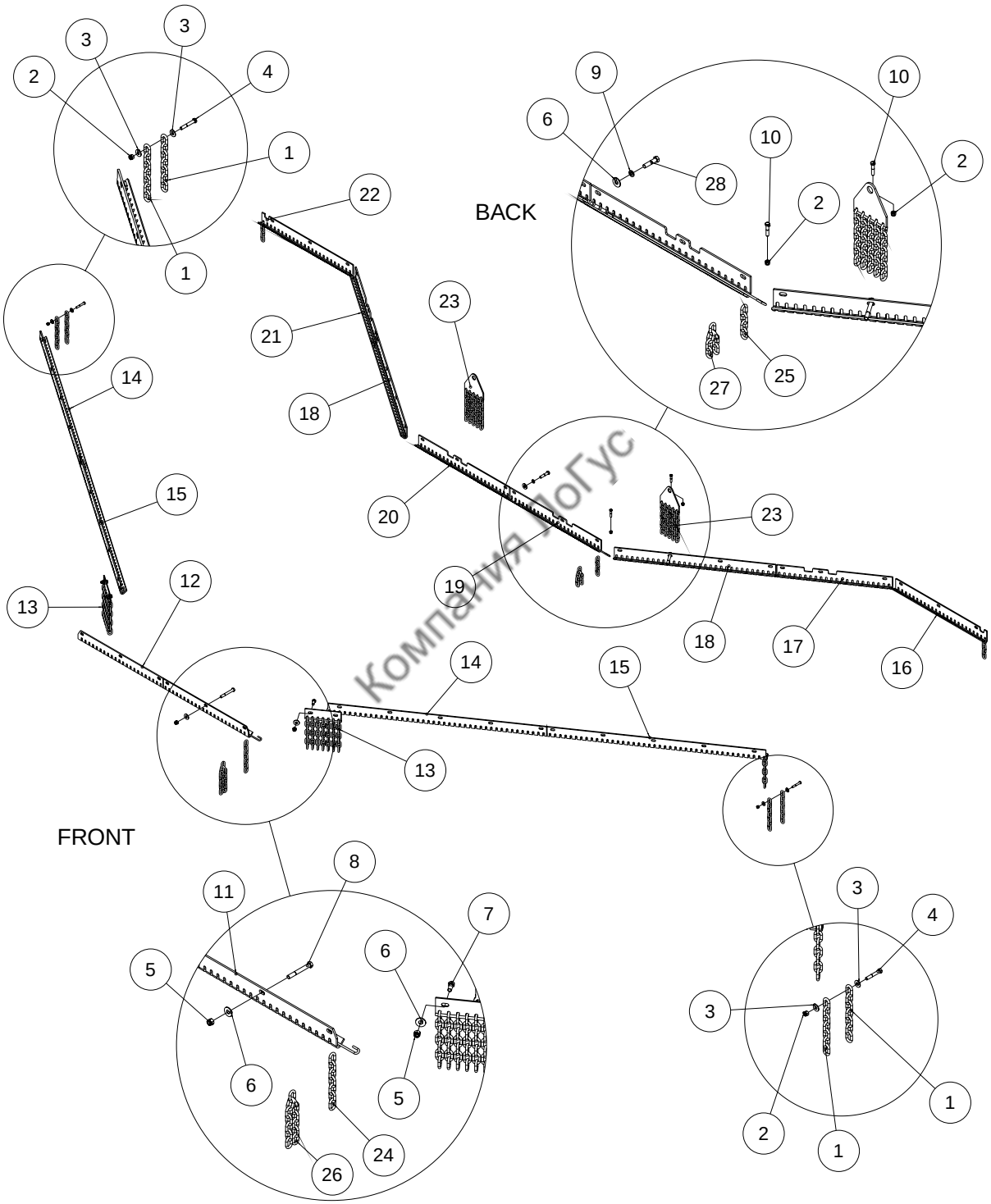

Компания ЛоГус

© 2007 Alamo Group Inc.

FX520-CHAIN GUARDS

Ref.	Part No.	Qty	Description
1	225-104	4	Chain, 7 Link
2	270-017	6	Locknut, 3/8 UNC, plated
3	256-017	4	Washer, 3/8",
4	250-026	2	Bolt, 3/8 x 2-1/2, UNC, GR5, plated,
5	270-007	30	Locknut, 1/2 UNC, plated
6	256-011	56	Washer, 1/2, AS type A, 9/16 IDx1-3/8 ODx.109,
7	250-061	4	Bolt, 1/2 x 1-1/4 UNC, GR5,
8	250-048	26	Bolt, 1/2 x 4 UNC, GR5, plated,
9	255-009	26	Lockwasher, 1/2
10	250-023	4	Bolt, 3/8 x 1-3/4 UNC, GR5, pl;ated,
11	C520-507	1	Chain Curtain, Front Left, Center Section
	6251-002	1	Chain Rod, 1/4" x 31-1/4" long, 27-1/4" UL bent
12	C520-506	1	Chain Curtain, Front Right, Center Section
	6251-002	1	Chain Rod, 1/4" x 31-1/4" long, 27-1/4" UL bent
13	C520-512	2	Front Hinge Chain Curtain
14	C520-501	2	Chain Curtain, Front
	6251-001	2	Chain Rod, 1/4" x 55-1/2" long, 51-1/2" UL bent
15	C520-502	2	Chain Curtain, Front
	6251-001	2	Chain Rod, 1/4" x 55-1/2" long, 51-1/2" UL bent
16	C520-503	1	Chain Curtain, Outer Left Wing
	6251-003	1	Chain Rod, 1/4" x 33-1/4" long, 29-1/4" UL bent
17	C520-509	1	Chain Curtain, Middle, Left Wing
	6251-005	1	Chain Rod, 1/4" x 30-5/8" long, 26-5/8" UL bent
18	C520-505	2	Chain Curtain, Inner Wing
	6251-004	2	Chain Rod, 1/4" x 41-5/8" long, 37-5/8" UL bent
19	C520-510	1	Chain Curtain, Back Left, Center Section
	6251-003	1	Chain Rod, 1/4" x 33-1/4" long, 29-1/4" UL bent
20	C520-511	1	Chain Curtain, Back Right, Center Section
	6251-003	1	Chain Rod, 1/4" x 33-1/4" long, 29-1/4" UL bent
21	C520-508	1	Chain Curtain, Middle, Right Wing
	6251-005	1	Chain Rod, 1/4" x 30-5/8" long, 26-5/8" UL bent
22	C520-504	1	Chain Curtain, Outer Right Wing
	6251-003	1	Chain Rod, 1/4" x 33-1/4" long, 29-1/4" UL bent
23	C520-513	2	Back Hinge Chain Curtain
24	225-104	212	Chain, 7 Link FRONT (Single Chains)
25	225-113	202	Chain, 4 Link BACK (Single Chains)
26	225-103	212	Chain, 13 Link FRONT (Double Chains)
27	225-104	202	Chain, 7 Link BACK (Double Chains)
28	250-059	26	Bolt, 1/2 x 1-1/2" UNC

Компания ЛоГус

© 2007 Alamo Group Inc.

FRONT BELTING

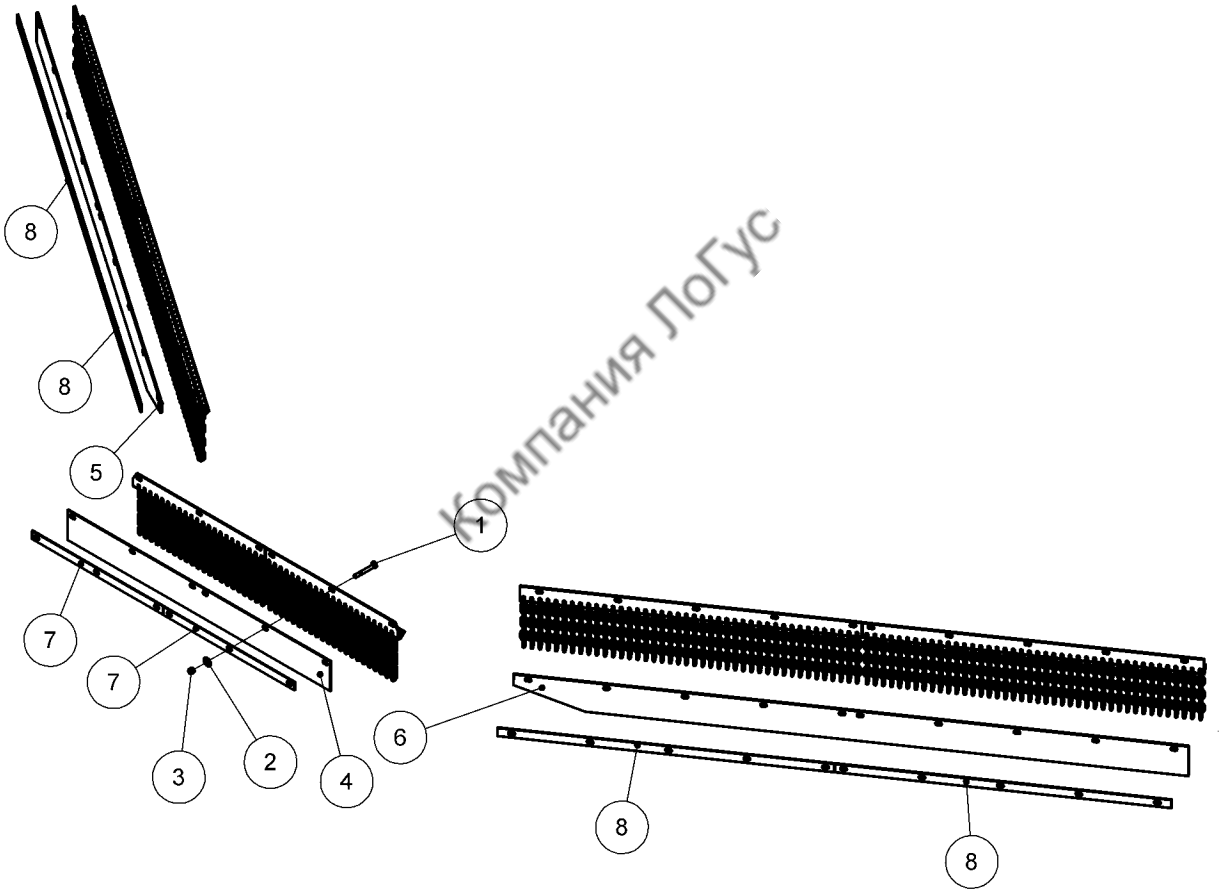

Компания ЛоГус

FRONT BELTING

C520-580 Front Belting, Half Height

Ref.	Part No.	Description	Qty
1	250-048	Bolt, ½” x 4” UNC (supplied with chain guards)	26
2	256-011	Washer, ½” (supplied with chain guards)	26
3	270-007	Locknut, ½” UNC (supplied with chain guards)	26
4	C520-581	Center Belting, Half Chain Height	1
5	C520-582	Right Wing Belting, Half Chain Height	1
6	C520-583	Left Wing Belting, Half Chain Height	1
7	C520-584	Retainer Bar, Center	2
8	C520-585	Retainer Bar, Wing	4

C520-590 Front Belting, Full Height

Ref.	Part No.	Description	Qty
1	250-048	Bolt, ½” x 4” UNC (supplied with chain guards)	26
2	256-011	Washer, ½” (supplied with chain guards)	26
3	270-007	Locknut, ½” UNC (supplied with chain guards)	26
4	C520-591	Center Belting, Full Chain Height	1
5	C520-592	Right Wing Belting, Full Chain Height	1
6	C520-593	Left Wing Belting, Full Chain Height	1
7	C520-584	Retainer Bar, Center	2
8	C520-585	Retainer Bar, Wing	4

Компания ЭБИС

HYDRAULICS

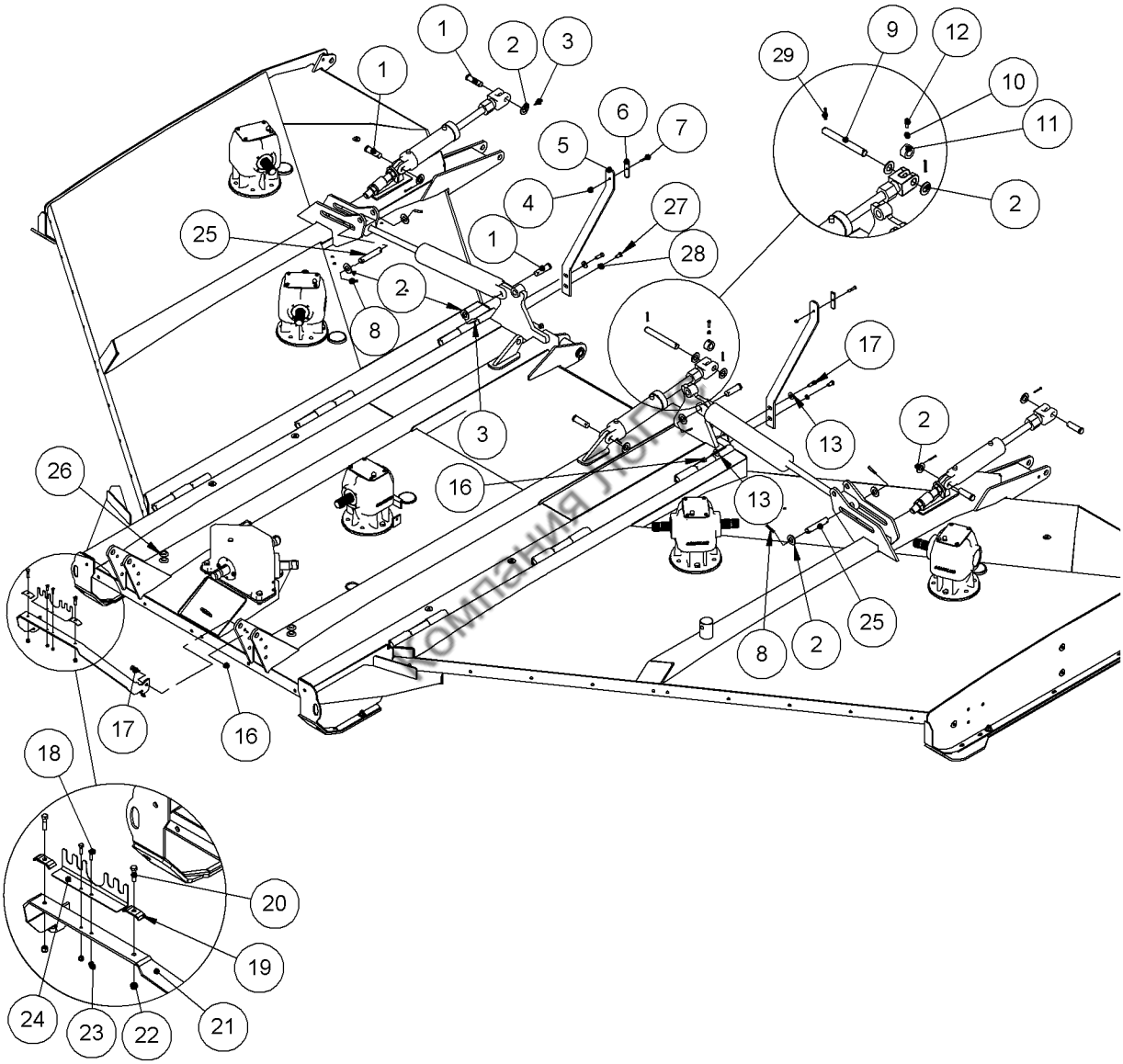
1
2
3
1
6
7
5
4
27
28
1
25
2
8
3
29
9
12
10
11
2
17
13
2
16
13
26
25
8
2
17
16
18
20
19
24
23
22
21

HYDRAULICS

Ref.	Part No.	Description	Qty
1	302-015	Clevis Pin, 1” x 2-7/8” UL	7
2	256-001	Washer, 1”	13
3	271-005	Cotter Pin, 3/16” x 1-1/2”	7
4	270-020	Locknut, 5/16” UNC	2
5	C520-162	Hose Stand	2
6	C000-012	Clamp, 4 Hoses	2
7	250-012	Bolt, 5/16” x 1-3/4” UNC	2
8	262-006	Roll Pin, 3/8” x 2”	6
9	C520-164	Center Cylinder Pin	1
10	257-032	Nut, 3/8” UNC	1
11	C520-163	Spacer	1
12	268-004	Set Screw, 3/8” x 1” UNC allen head, cup point	1
13	256-011	Washer, 1/2”	4
16	270-007	Locknut, ½” UNC	4
17	250-059	Bolt, ½” x 1-1/2” UNC	4
18	250-002	Bolt, ¼” x 1” UNC	2
19	C000-001	Clamp, 2 Hose	2
20	250-020	Bolt, 3/8” x 1-1/2” UNC	2
21	C520-160	Hose Holder	1
22	270-017	Locknut, 3/8” UNC	2
23	270-025	Locknut, ¼” UNC	2
24	C520-161	Hose Storage Bracket	1
25	C520-168	Wing Cylinder Pin	2
26	233-056	Rubber Grommet, 1” ID	4
27	250-063	Bolt, ½” x 1” UNC	2
28	255-009	Lockwasher, ½”	2
29	262-007	Roll Pin, ¼” x 2”	2

Компания ЛоГус

SINGLE ACTING WINGLIFT CIRCUIT

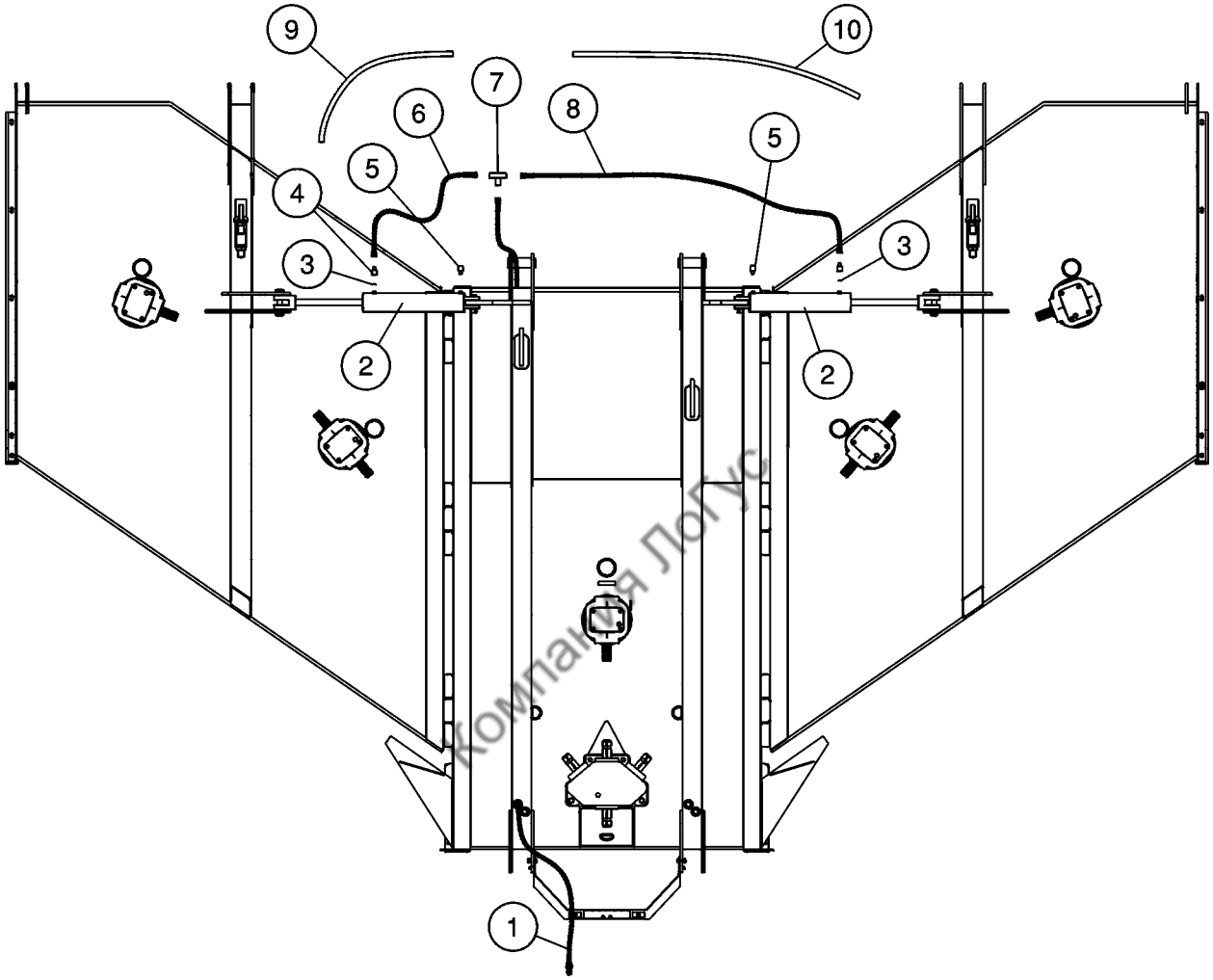

Компания ЛогЮс

Ref.	Part No.	Description	Qty
1	111-270	Hydraulic Hose, ¼” x 235” long	1
2	100-3061	Cylinder, 3” x 16”	2
3	C000-006	Restrictor	2
4	108-069	Elbow, 90 deg, 8 M-ORB x 6 M-JIC	2
5	108-056	Breather	2
6	111-271	Hydraulic Hose, ¼” x 39” long	1
7	108-070	Tee Connection, 6 M-JIC	1
8	111-272	Hydraulic Hose, ¼” x 74” long	1
9	280-302	Abrasion Sleeve, 60” long	1
10	280-301	Abrasion Sleeve, 98” long	1

PHASING CIRCUIT

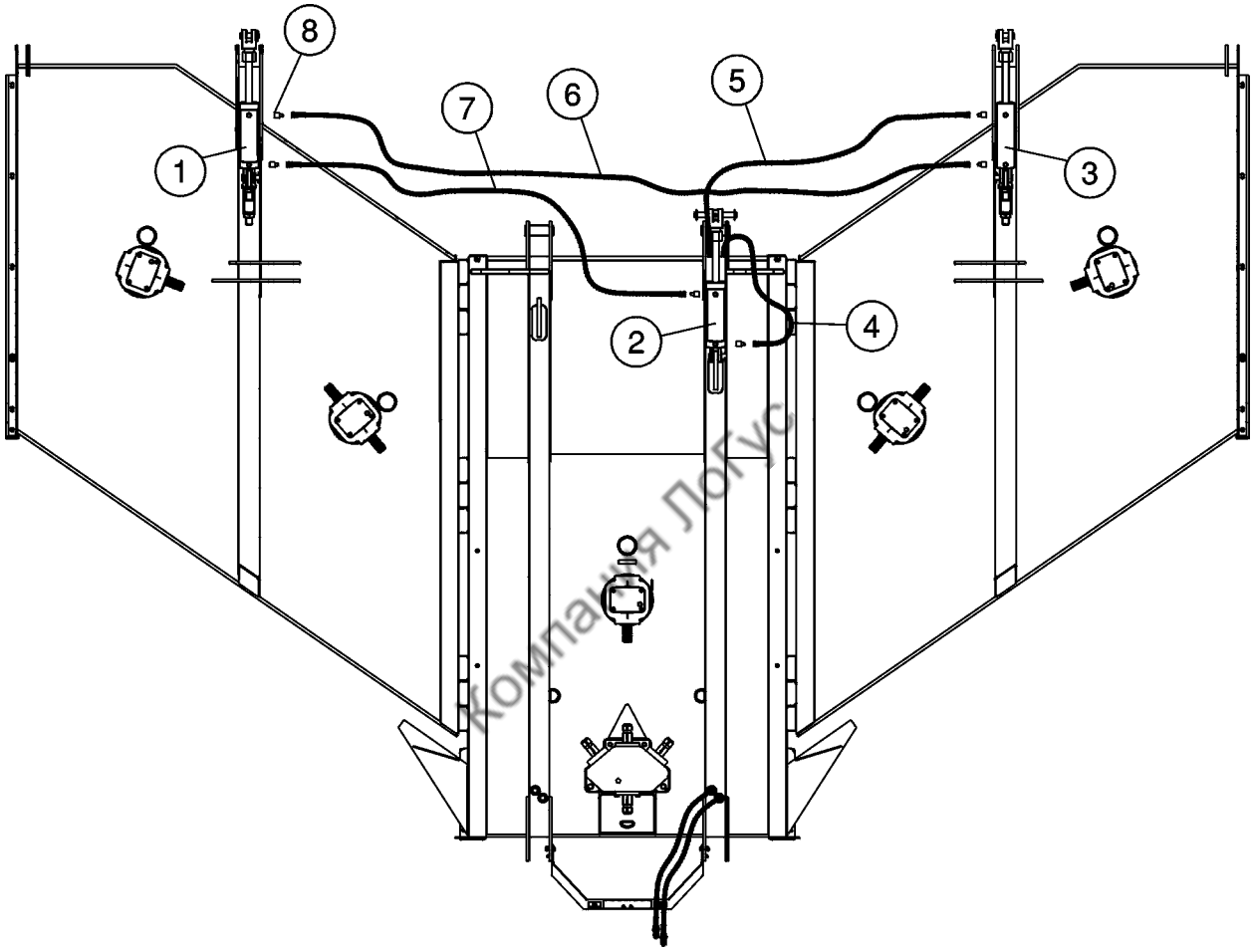

Компания ЛоГус

Ref.	Part No.	Description	Qty
1	100-3682	Cylinder, 3-1/4” x 8” Phasing	1
2	100-3672	Cylinder, 3-1/2” x 8” Phasing	1
3	100-3692	Cylinder, 3” x 8” Phasing	1
4	111-266	Hydraulic Hose, ¼” x 268” long	1
5	111-269	Hydraulic Hose, ¼” x 306” long	1
6	111-268	Hydraulic Hose, ¼” x 170” long	1
7	111-267	Hydraulic Hose, ¼” x 116” long	1
8	108-069	Elbow, 90 deg, 8 M-ORB x 6 M-JIC	6

WING LIFT CYLINDER, 3-1/2” X 16” (100-3061)

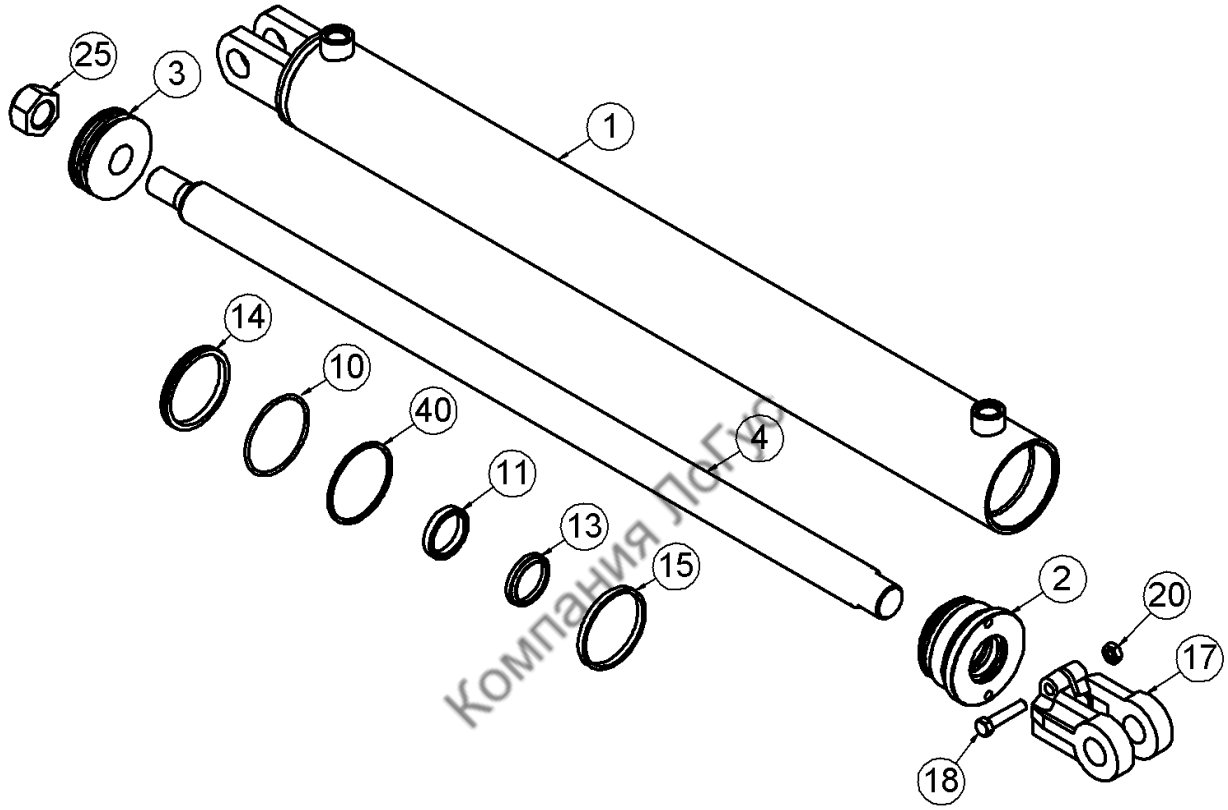

Компания ЛоГо

Ref.	Part No.	Description	Qty
1	101-280	Casing (3-1/2 x16)	1
2	101-155	Cylinder Head	1
3	101-281	Piston 3 ½”	1
4	101-282	Cylinder Rod	1
17	101-021	Rod Clevis	1
18	250-023	Bolt	1
20	270-017	Hex Nut	1
25	101-283	Piston Lock Nut	1
26	101-064W	Seal Kit, Includes #10,11,13-15,40	1

PHASING CYLINDERS

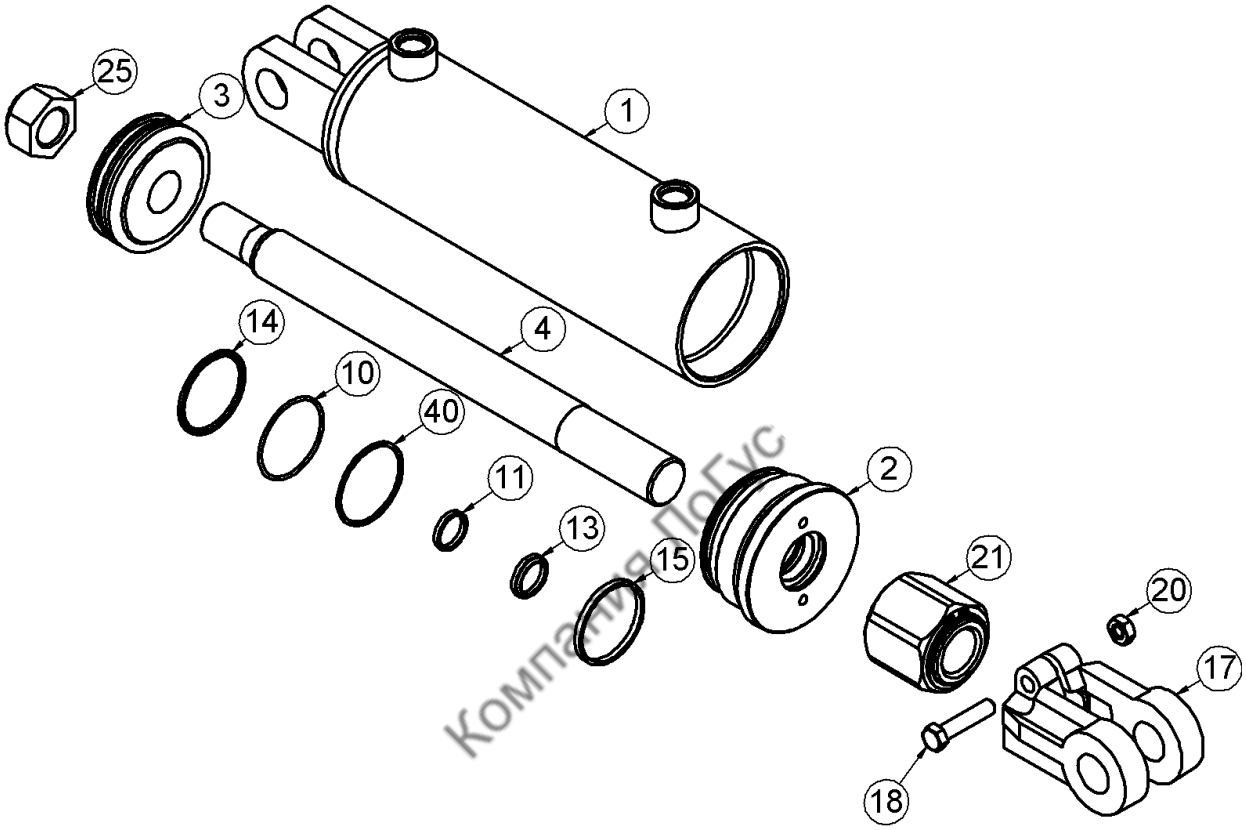

Компания ПоГус

Ref.	3” Part No.	3-1/4” Part No.	3-1/2” Part No.	Description	Qty
	100-3692	100-3682	100-3672	Complete Cylinder	
1	101-134	101-135	101-136	Casing	1
2	101-137	101-138	101-139	Cylinder Head	1
3	101-082	101-083	101-084	Piston	1
4	101-142	101-142	101-142	Rod	1
17	101-021	101-021	101-021	Rod Clevis	1
18	250-023	250-023	250-023	Bolt, 3/8” x 1-3/4” UNC, Gr 5	1
20	270-017	270-017	270-017	Lock Nut, 3/8” UNC	1
21	101-020	101-020	101-020	Stroke Control Assembly	1
25	101-243	101-243	101-243	Lock Nut, 1”	1
41	101-065	101-066	101-067	Seal Kit, Includes #10,11,13-15,40	1

TRACTOR SHAFT

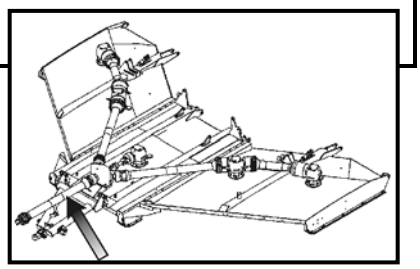

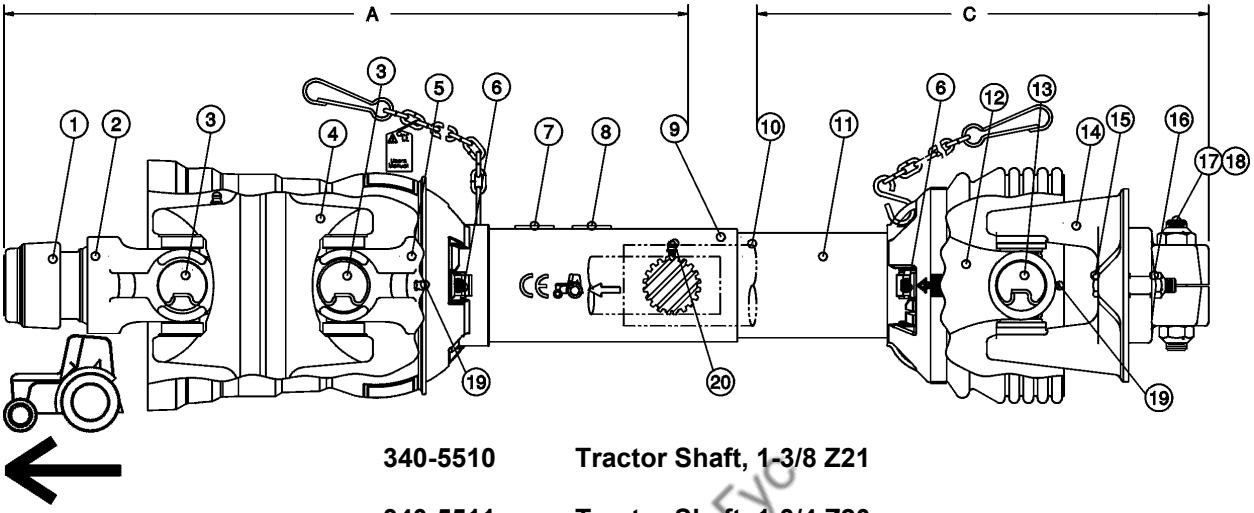

340-5510 **Tractor Shaft, 1-3/8 Z21**

340-5511 **Tractor Shaft, 1-3/4 Z20**

Ref.	Part No.	Description	Qty
A	341-5564	Joint & Shaft Half With Guard **1-3/8 Z21**	1
A	341-5565	Joint & Shaft Half With Guard **1-3/4 Z20**	1
C	341-5566	Joint & Tube Half With Guard	1
1	341-5501	Auto-Lock Repair Kit **1-3/8 Z21**	1
1	341-5522	Auto-Lock Repair Kit **1-3/4 Z20**	1
2	341-5567	Yoke, Q.D. **1-3/8 Z21**	1
2	341-5568	Yoke, Q.D. **1-3/4 Z20**	1
3	341-5569	Cross Kit	2
4	341-5570	Center Housing	1
5	341-5571	Yoke & Tube	1
6	341-4437	Guard repair Kit	2
7	341-5512A	Safety Sign	1
8	341-5512C	Safety Sign	1
9	341-5572	Outer Guard	1
10	341-5573	Inner Guard	1
11	341-5512B	Safety Sign	1
12	341-5574	Yoke & Tube	1
13	341-5559	Cross Kit	1
14	341-5575	Shear Yoke Assembly	1
15	341-5598	Shear Bolt & Nut, 7/16” –14, 2.25” lg, gr. 5	1
16	341-5598A	Locknut, 7/16”-14	1
17	341-5577	Bolt, 5/8-11 x 2.25, Gr. 5	2
18	341-5578	Locknut, 5/8-11	2
19	341-5554	Grease Fitting	2
20	341-5555	Grease Fitting	1

Компания ЛоБуС

CENTER SHAFT

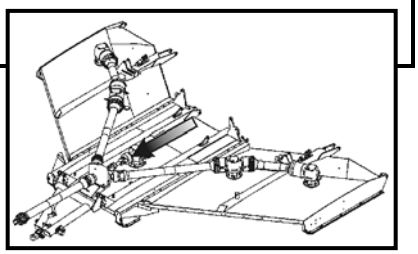

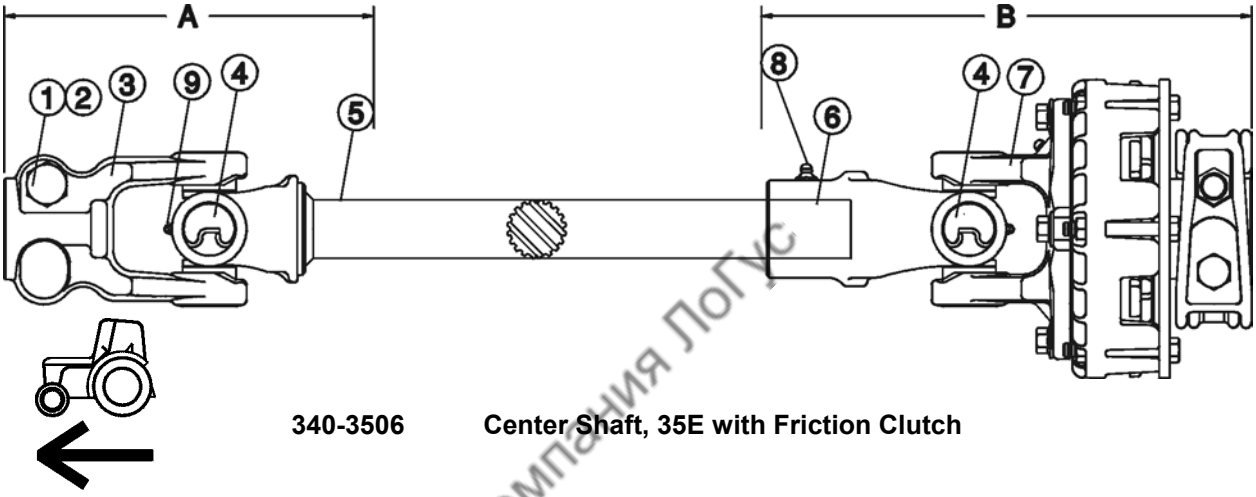

340-3506 Center Shaft, 35E with Friction Clutch

Компания ЛоГус

Ref.	Part No.	Description	Qty
A	341-3550	Joint & Tube Half	1
B	341-3551	Telescoping Joint Half	1
1	341-5577	Bolt	1
2	341-5578	Lock Nut	1
3	341-3543	Yoke, 1-3/4 Z20	1
4	341-3544	Cross Kit	2
5	341-3552	Yoke & Shaft	1
6	341-3553	Telescoping Yoke	1
7	341-3549	Friction Clutch	1
8	341-3554	Grease Fitting	1
9	341-5555	Grease Fitting	1

OUTER WING SHAFT

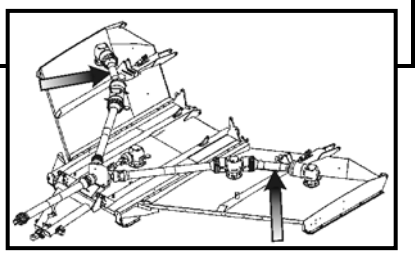

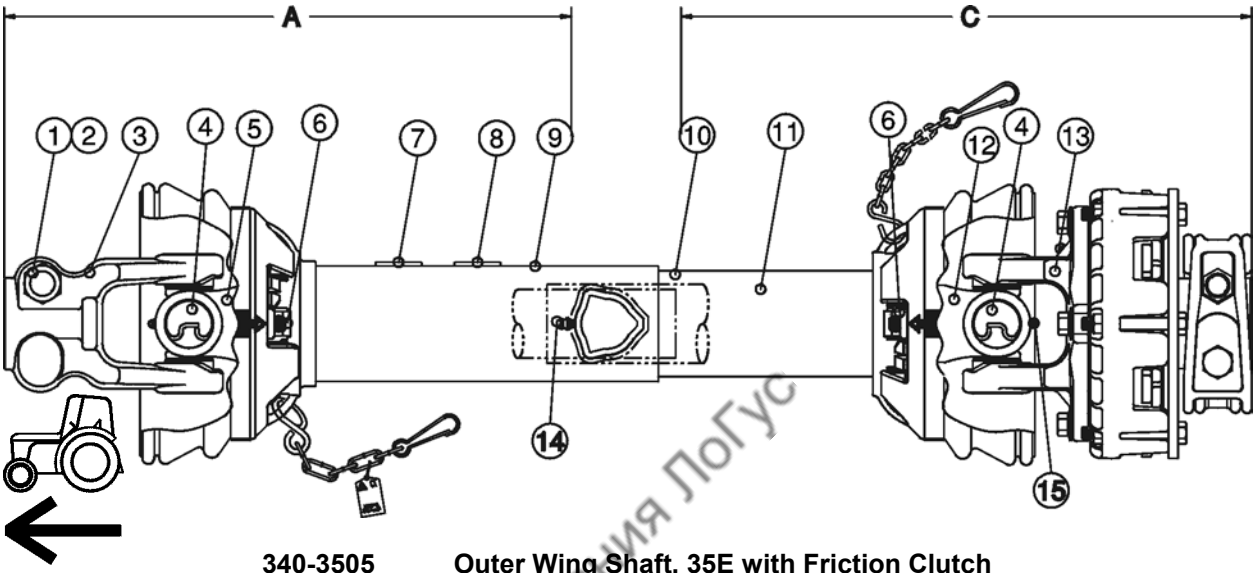

340-3505 Outer Wing Shaft, 35E with Friction Clutch

Ref.	Part No.	Description	Qty
A	341-3541	Joint & Tube Half With Guard	1
C	341-3542	Joint & Tube Half With Guard	1
1	341-5577	Bolt	1
2	341-5580	Lock Nut	1
3	341-3543	Yoke, 1 ¾ Z20	1
4	341-3544	Cross Kit	2
5	341-3545	Yoke & Tube	1
6	341-4437	Nylon Repair Kit	2
7	341-5512A	Safety Sign	1
8	341-5512G	Warning Decal	1
9	341-3546	Outer Guard	1
10	341-3547	Inner Guard	1
11	341-5512B	Safety Sign	1
12	341-3548	Yoke & Tube	1
13	341-3549	Friction Clutch	1
14	341-5554	Grease Fitting	1
15	341-5555	Grease Fitting	2

Компания ЛоГус

FRICTION CLUTCH (341-3549)

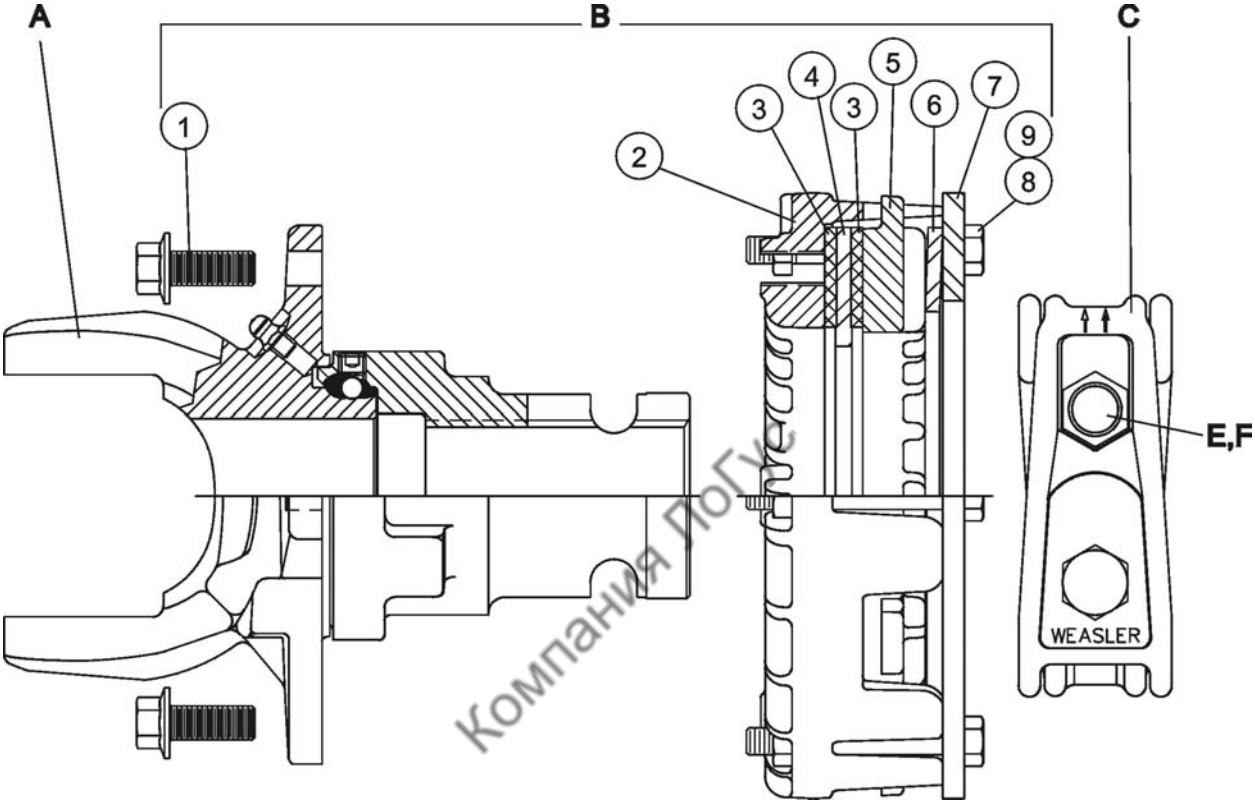

Компания ЛоГус

Ref.	Part No.	Description	Qty
A	341-3556	Yoke & Hub	1
B	341-3555	Clutch Pack	1
C	341-4427	Clamp	1
1	341-4425	Bolt M10 x 25mm #10.9	4
2	341-4429	Housing	1
3	341-3501	Friction Disc	2
4	341-3507	Separator Plate	1
5	341-3508	Pressure Plate	1
6	341-3509	Spring	1
7	341-3510	Compression Plate	1
8	341-3504	Bolt, .312 x 2.50 #8	6
9	341-3505	Nut, .312	6
E	250-0502	Bolt, ½” x 3-1/2” UNC, GR8	1
F	270-007	Lock Nut, ½” UNC	1

INNER WING SHAFT

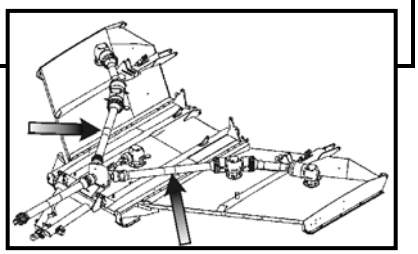

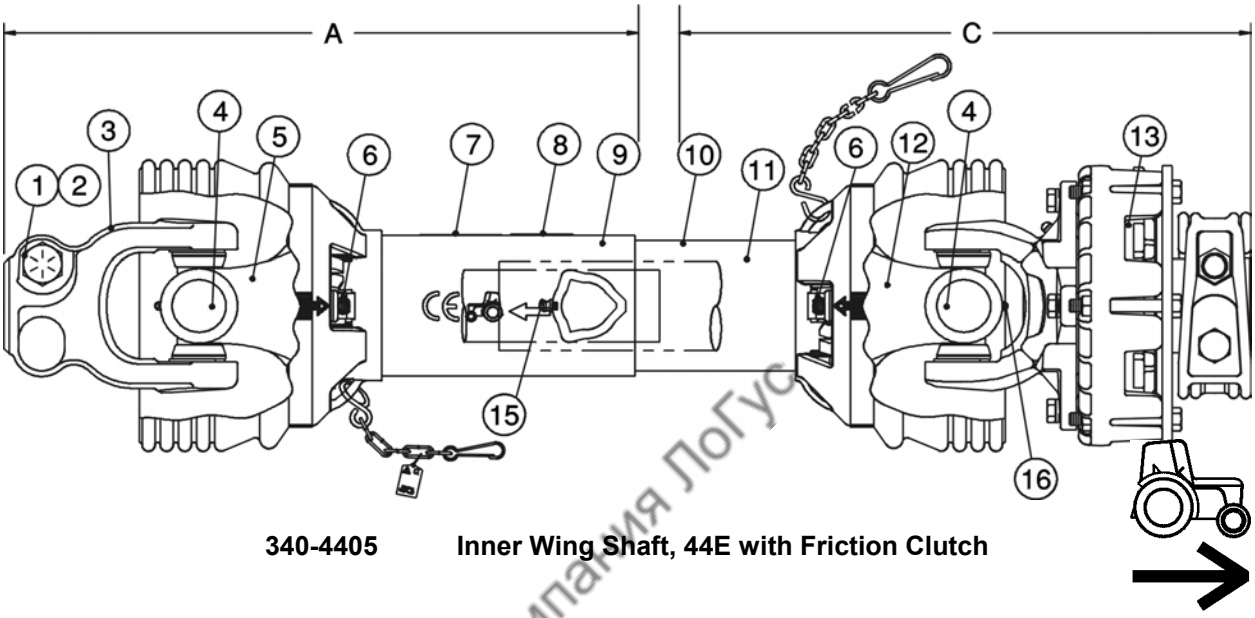

340-4405 Inner Wing Shaft, 44E with Friction Clutch

Компания ЛоГус

Ref.	Part No.	Description	Qty
A	341-4434	Joint & Shaft Half With Guard	1
C	341-4435	Joint & Tube Half With Guard	1
1	341-5579	Bolt, .625 x 3.50 #8	1
2	341-5581	Lock Nut, .625 - 18	1
3	341-4410	Yoke, 1 ¾ Z20	1
4	341-4402	Cross Kit	2
5	341-4436	Yoke & Tube	1
6	341-4437	Nylon Repair Kit	2
7	341-5512A	Safety Sign	1
8	341-5512C	Safety Sign	1
9	341-4438	Outer Guard	1
10	341-4439	Inner Guard	1
11	341-5512B	Safety sign	1
12	341-4440	Yoke & Tube	1
13	341-4441	Friction Clutch	1
15	341-5554	Grease Fitting	1
16	341-5555	Grease Fitting	1

FRICTION CLUTCH (341-4441)

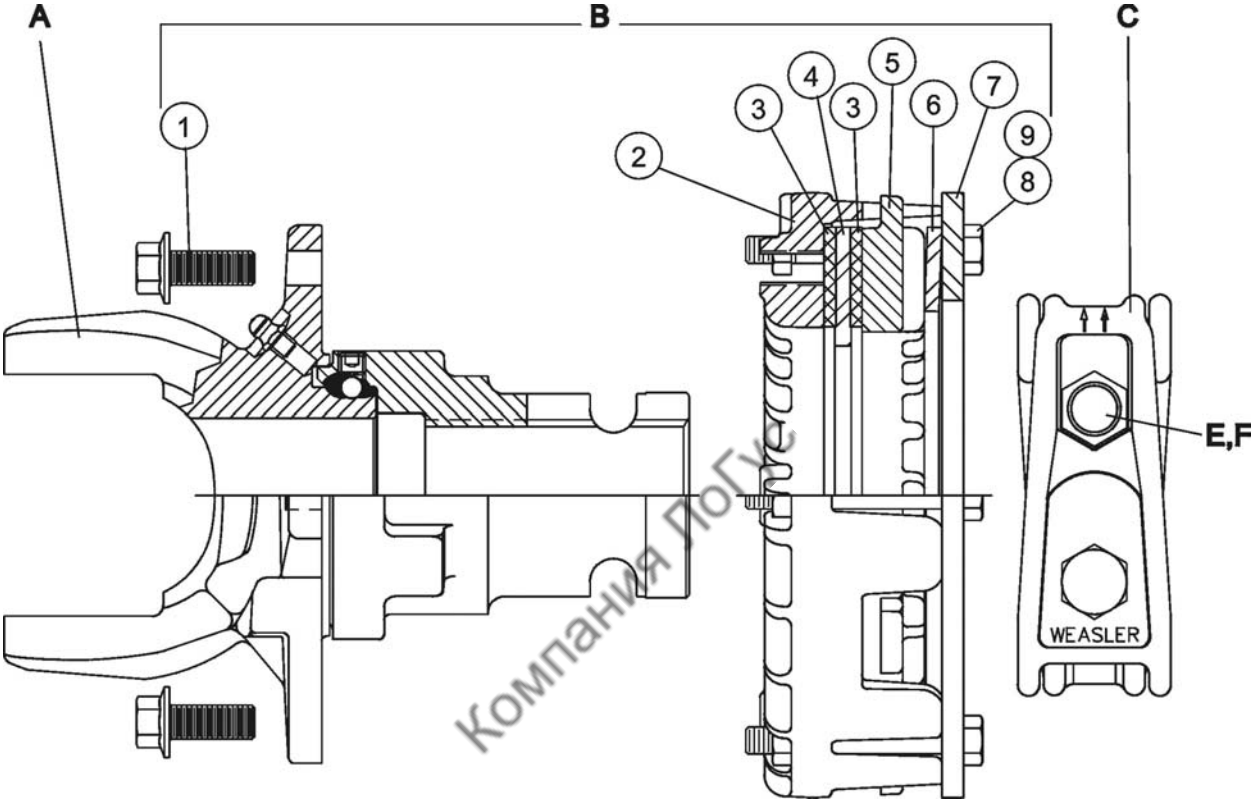

Компания ЛоГус

Ref.	Part No.	Description	Qty
A	341-4426	Yoke & Hub	1
B	341-4443	Clutch Pack	1
C	341-4427	Clamp	1
1	341-4425	Bolt M10 x 25mm #10.9	4
2	341-4429	Housing	1
3	341-3501	Friction Disc	2
4	341-3507	Separator Plate	1
5	341-3508	Pressure Plate	1
6	341-4442	Spring	1
7	341-3510	Compression Plate	1
8	341-3504	Bolt, .312 x 2.50 #8	6
9	341-3505	Nut, .312	6
E	250-0502	Bolt, ½” x 3-1/2” UNC, GR8	1
F	270-007	Lock Nut, ½” UNC	1

DIVIDER GEARBOX (330-9001)

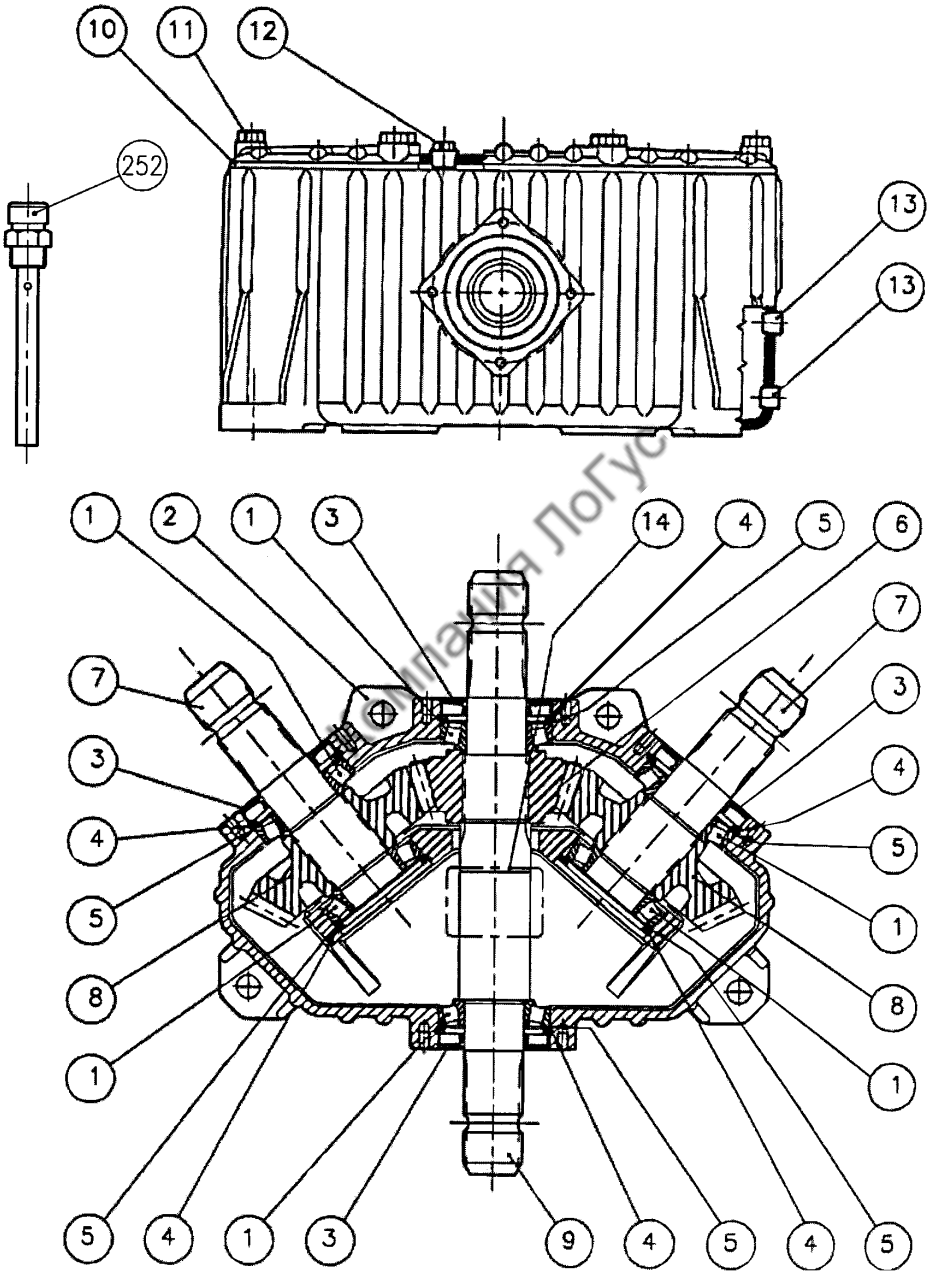

DIVIDER GEARBOX (330-9001)

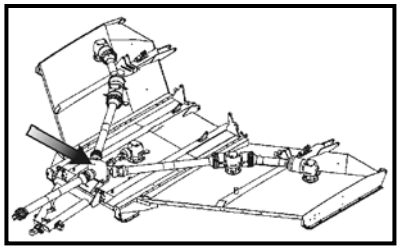

330-9001 Comer # 9.305.801.01 1.35:1 ratio

Ref.	Part No.	Description	Qty
1	331-564	Bearing	6
2	331-9101	Casing	1
3	331-9019	Oil Seal, 45 x 85 x 10	4
4	331-9102	Snap Ring	6
5	331-7122	Shim, 84.7	6
6	331-9103	Gear, M6 Z20	1
7	331-9105	Shaft, 1-3/4” Z20	2
8	331-9104	Gear, M6 Z27	2
9	331-9106	Shaft, 1-3/4” Z20	1
10	331-9107	Cover	1
11	331-9108	Bolt, M10 x 35 Gr 8.8	6
12	331-7123	Plug, 1/2” gas	1
13	331-905	Plug, 3/8” gas	2
14	----------	Name Plate	1
252	331-7120	½” Gas Oil Breather Level Plug	1

Компания ЛоГус

RIGHT ANGLE GEARBOX (330-7014)

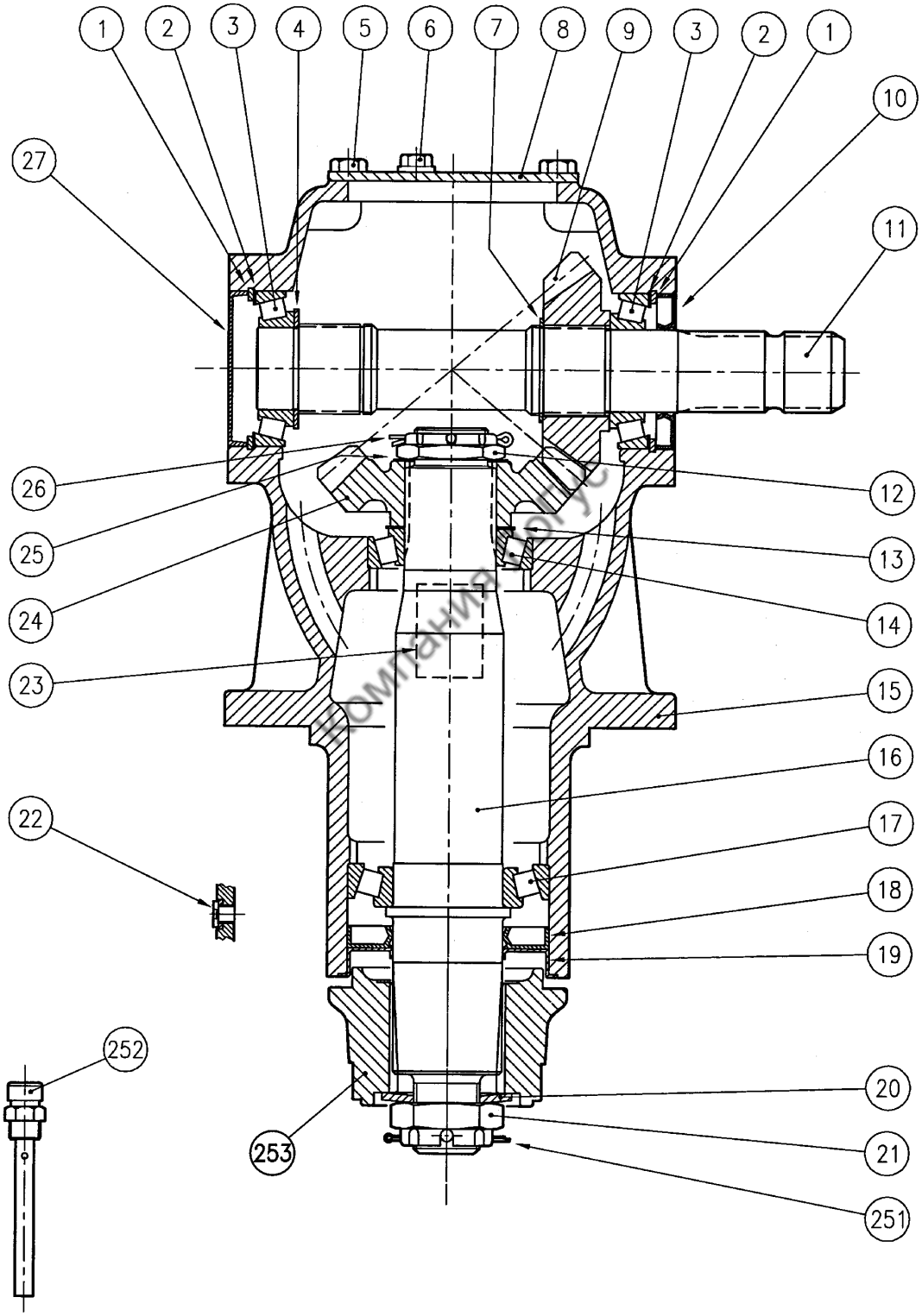

RIGHT ANGLE GEARBOX (330-7014)

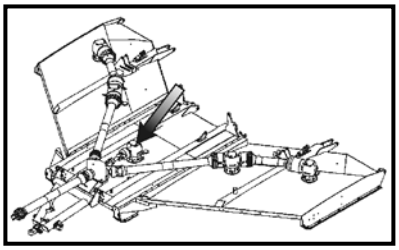

330-7014 Comer # 223.003.10 1.18:1 ratio

Ref.	Part No.	Description	Qty
1	331-914	Snap Ring (85x88.5x3, For Holes)	2
2	331-7122	Shim Kit (70.3x84.7)	2
3	331-564	Bearing (45x85x20.75)	2
4	331-7129	Shim (45.3x65.3x2.5)	1
5	331-7111	Bolt M10-20 (gr. 8.8)	4
6	331-7123	½” Gas Solid Plug	1
7	331-7124	Snap Ring (50x47x2, For Shafts	1
8	331-7110	Cover	1
9	331-7101	Crown Z17 M7.17	1
10	331-9019	Oil Seal (45x85x10)	1
11	331-7107	Input Shaft 1 ¾” Z20	1
12	331-7130	Castle Nut M40x1.5	1
13	331-7125	Shim Kit (50.3x70.3)	1
14	331-7012	Bearing 30210 (50x90x21.75)	1
15	331-7113	Housing	1
16	331-7150	Output Shaft	1
17	331-7114	Roller Bearing (60x110x23.75)	1
18	331-7115	Dust Lip (60x110x12)	1
19	331-7116	Seal Protector	1
20	331-880	Belleville Spring (71x36x4 DIN2093)	1
21	331-7126	Castle Nut M36x3	1
22	331-7118	1/8” Gas Hex Socket Screw Plug	1
23	----------	Name Plate	1
24	331-7104	Crown Z20 M7.17	1
25	331-7128	Shim (40.3x61.7x1)	1
26	331-7117	Cotter Pin B5x60	1
27	331-559	Oil Cap (85x10)	1
251	331-878	Cotter Pin, B6 x 70	1
252	331-7120	½” Gas Oil Breather Level Plug	1
253	331-8152	Hub	1

Компания ЛоГус

RIGHT ANGLE GEARBOX (330-7023)

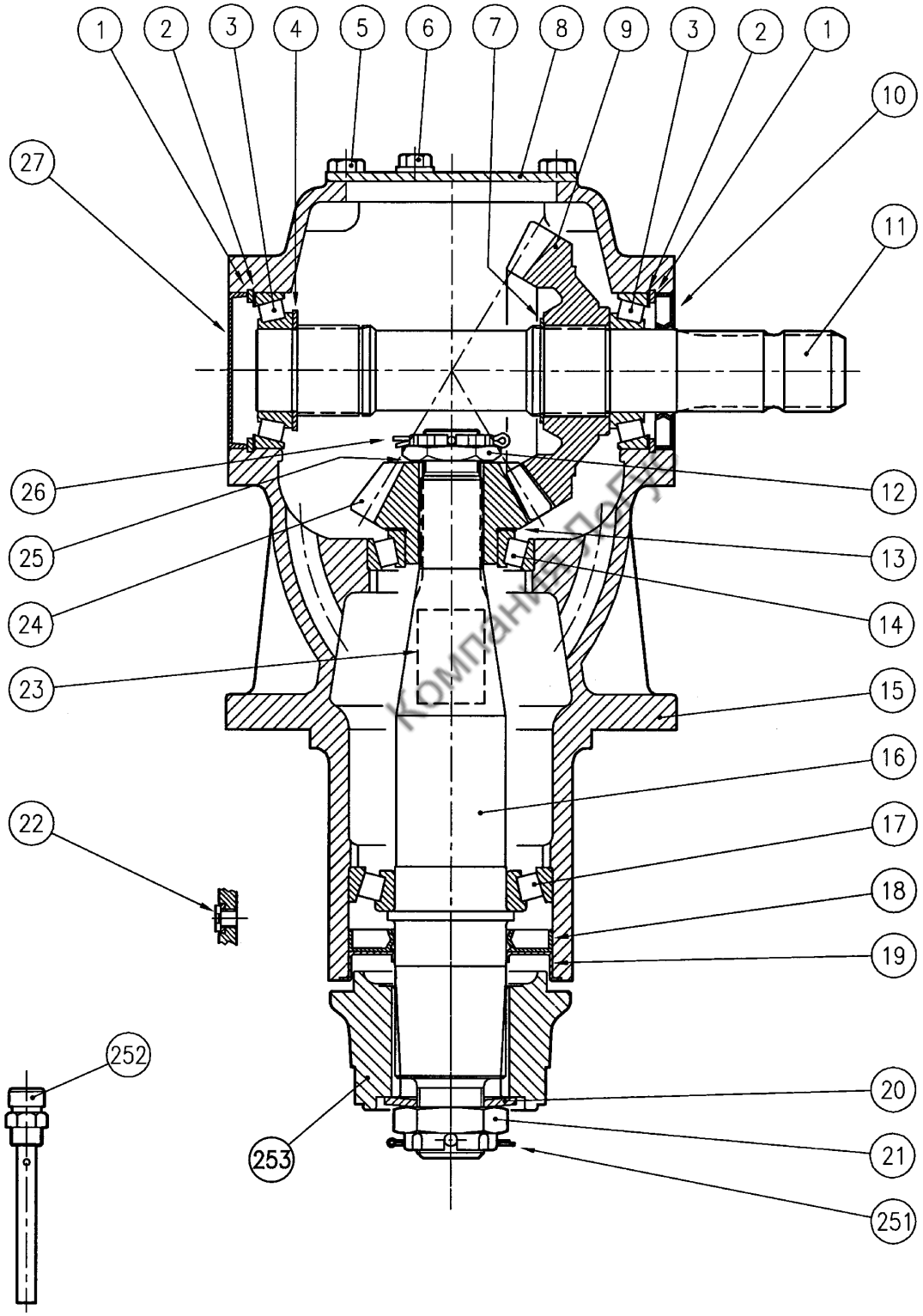

RIGHT ANGLE GEARBOX (330-7023)

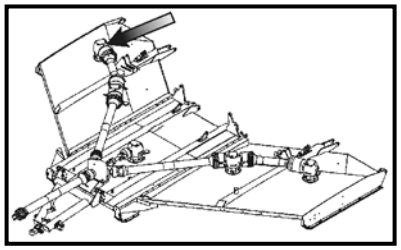

330-7023 Comer # 223.005.10 1:1.69 ratio

Ref.	Part No.	Description	Qty
1	331-914	Snap Ring (85x88.5x3, for Holes)	2
2	331-7122	Shim Kit (70.3x84.7)	2
3	331-564	Bearing (45x85x20.75)	2
4	331-7129	Shim (45.3x65.3x2.5)	1
5	331-7111	Bolt M10x20 (gr. 8.8)	4
6	331-7123	½” Gas Solid Plug	1
7	331-7124	Snap Ring (50x47x2, for Shafts)	1
8	331-7110	Cover	1
9	331-7100	Crown Z22 M7.25	1
10	331-9019	Dust Lip (45x85x10)	1
11	331-7107	Input Shaft 1 ¾” Z20	1
12	331-7007	Castle Nut M30x1.5	1
13	331-7125	Shim Kit (50.3x70.3)	1
14	331-7012	Bearing (50x90x21.75)	1
15	331-7113	Housing	1
16	331-7147	ASA D.P. 8/16 Z18 Output Shaft	1
17	331-7114	Roller Bearing (60x110x23.75)	1
18	331-7115	Dust Lip (60x110x12)	1
19	331-7116	Seal Protector	1
20	331-880	Belleville Spring (71x36x4 DIN2093)	1
21	331-7126	Castle Nut M36x3	1
22	331-7118	1/8” Gas Hex Socket Screw Plug	1
23	----------	Name Plate	1
24	331-7103	Pinion Z13 M7.25	1
25	331-7127	Shim (30.3x44x1)	1
26	331-7117	Cotter Pin B5x60	1
27	331-559	Oil Cap (85x10)	1
251	331-878	Cotter Pin, B6 x 70	1
252	331-7120	½” Gas Oil Breather Level Plug	1
253	331-8152	Hub	1

Компания ЛоГус

RIGHT ANGLE GEARBOX (330-7024)

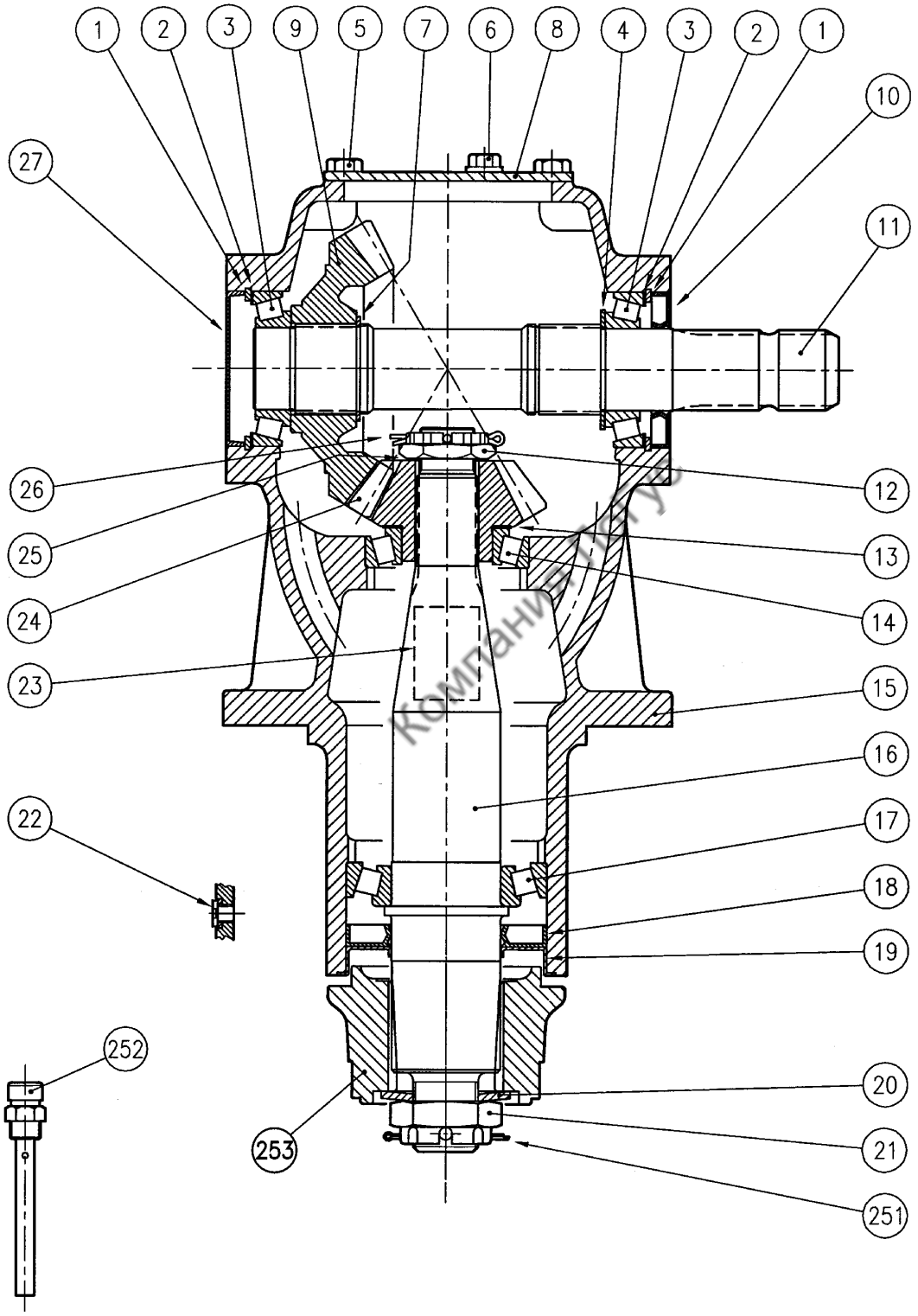

RIGHT ANGLE GEARBOX (330-7024)

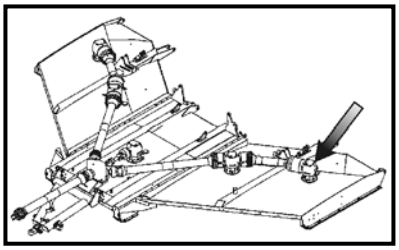

330-7024 Comer # 223.007.10 1:1.69 ratio

Ref.	Part No.	Description	Qty
1	331-914	Snap Ring (85x88.5x3, for Holes)	2
2	331-7122	Shim Kit (70.3x84.7)	2
3	331-564	Bearing (45x85x20.75)	2
4	331-7129	Shim (45.3x65.3x2.5)	1
5	331-7111	Bolt M10x20 (gr. 8.8)	4
6	331-7123	½” Gas Solid Plug	1
7	331-7124	Snap Ring (50x47x2, for Shafts)	1
8	331-7110	Cover	1
9	331-7100	Crown Z22 M7.25	1
10	331-9019	Dust Lip (45x85x10)	1
11	331-7107	Input Shaft 1 ¾” Z20	1
12	331-7007	Castle Nut M30x1.5	1
13	331-7125	Shim Kit (50.3x70.3)	1
14	331-7012	Bearing (50x90x21.75)	1
15	331-7113	Housing	1
16	331-7147	ASA D.P. 8/16 Z18 Output Shaft	1
17	331-7114	Roller Bearing (60x110x23.75)	1
18	331-7115	Dust Lip (60x110x12)	1
19	331-7116	Seal Protector	1
20	331-880	Belleville Spring (71x36x4 DIN2093)	1
21	331-7126	Castle Nut M36x3	1
22	331-7118	1/8” Gas Hex Socket Screw Plug	1
23	----------	Name Plate	1
24	331-7103	Pinion Z13 M7.25	1
25	331-7127	Shim (30.3x44x1)	1
26	331-7117	Cotter Pin B5x60	1
27	331-559	Oil Cap (85x10)	1
251	331-878	Cotter Pin, B6 x 70	1
252	331-7120	½” Gas Oil Breather Level Plug	1
253	331-8152	Hub	1

Компания ЛоГус

RIGHT ANGLE GEARBOX (330-7034)

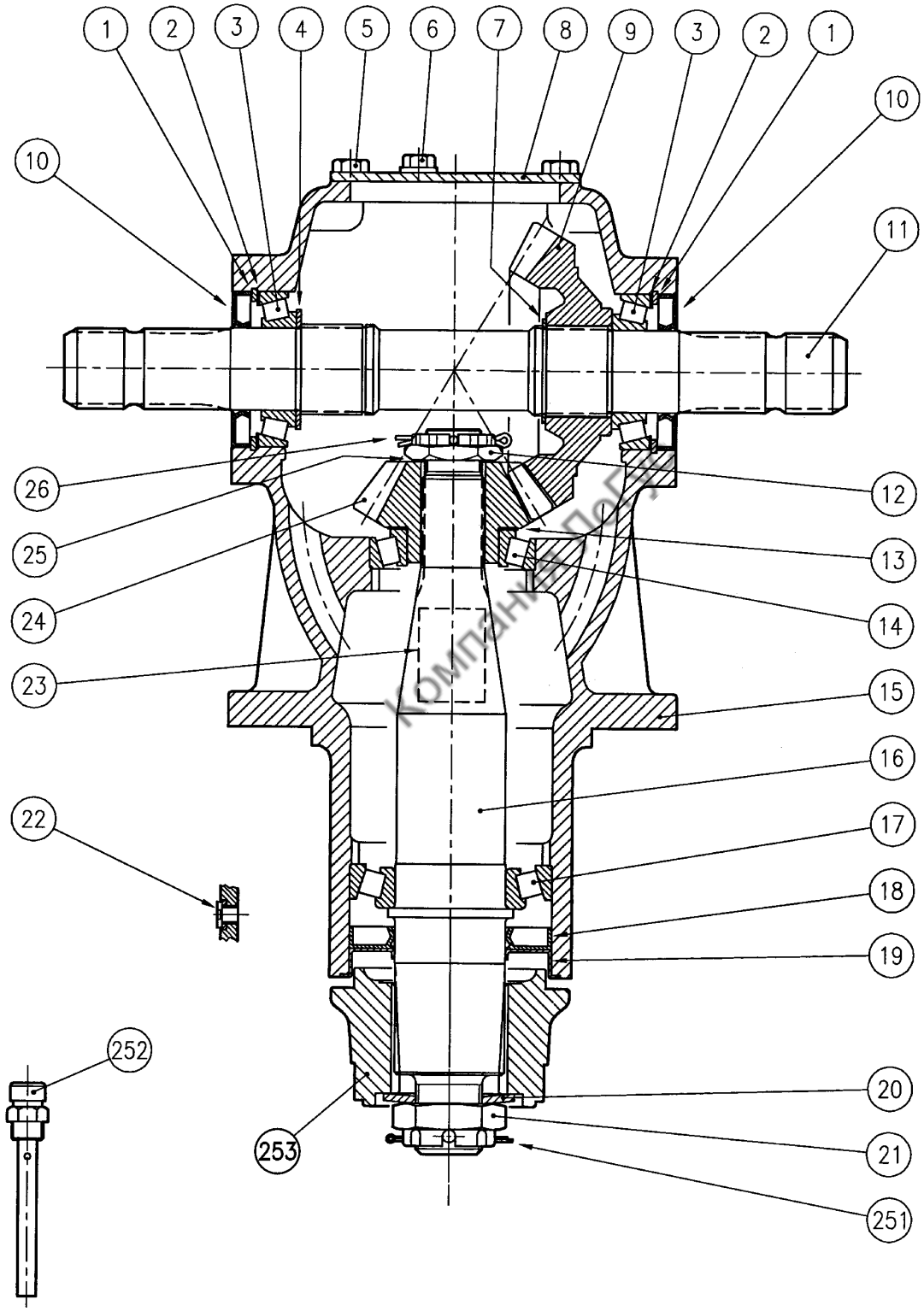

RIGHT ANGLE GEARBOX (330-7034)

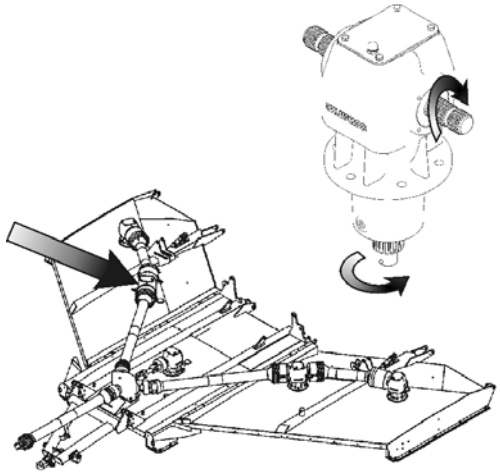

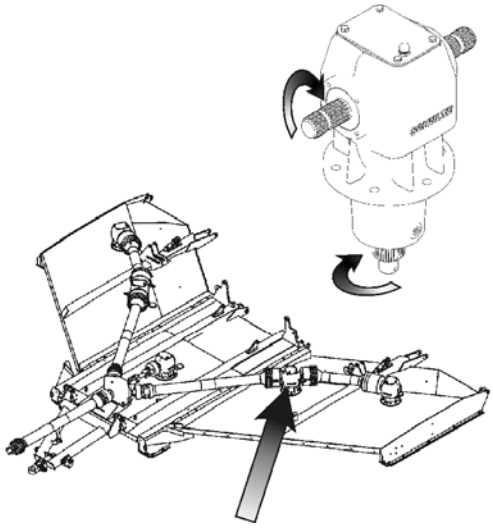

330-7034 Comer # 223.006.10 1:1.69 ratio

Компания ЛоГус

Ref.	Part No.	Description	Qty
1	331-914	Snap Ring (85x88.5x3, for Holes)	2
2	331-7122	Shim Kit (70.3x84.7)	2
3	331-564	Bearing (45x85x20.75)	2
4	331-7129	Shim (45.3x65.3x2.5)	1
5	331-7111	Bolt M10x20 (gr. 8.8)	4
6	331-7123	½” Gas Solid Plug	1
7	331-7124	Snap Ring (50x47x2, for Shafts)	1
8	331-7110	Cover	1
9	331-7100	Crown Z22 M7.25	1
10	331-9019	Dust Lip (45x85x10)	2
11	331-7106	1 ¾” Z20 Input Through Shaft	1
12	331-7007	Castle Nut M30x1.5	1
13	331-7125	Shim Kit (50.3x70.3)	1
14	331-7012	Bearing (50x90x21.75)	1
15	331-7113	Housing	1
16	331-7147	ASA D.P. 8/16 Z18 Output Shaft	1
17	331-7114	Roller Bearing (60x110x23.75)	1
18	331-7115	Dust Lip (60x110x12)	1
19	331-7116	Seal Protector	1
20	331-880	Belleville Spring (71x36x4 DIN2093)	1
21	331-7126	Castle Nut M36x3	1
22	331-7118	1/8” Gas Hex Socket Screw Plug	1
23	----------	Name Plate	1
24	331-7103	Pinion Z13 M7.25	1
25	331-7127	Shim (30.3x44x1)	1
26	331-7117	Cotter Pin B5x60	1
251	331-878	Cotter Pin, B6 x 70	1
252	331-7120	½” Gas Oil Breather Level Plug	1
253	331-8152	Hub	1

SAFETY CHAIN S000-010

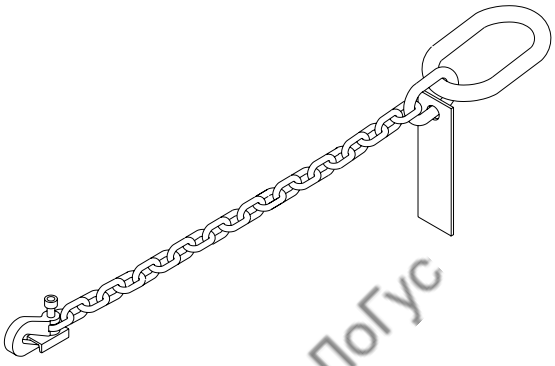

Компания ЛоГус

NOTE: 10,100 lbs capacity, 59" minimum length

NOTE: This safety chain is intended as an auxiliary attaching system per ASAE S338.3. The safety chain will help control the rotary cutter should it accidentally separate from the drawbar. Do Not Use the Safety Chain for Towing. Replace the entire chain if any link or end fitting is broken, damaged or stretched.

Ref.	Part No.	Qty	Description
1	S000-010	1	Safety Chain

© 2007 Alamo Group Inc.

FX520-TRANSPORT LIGHT KIT S000-080

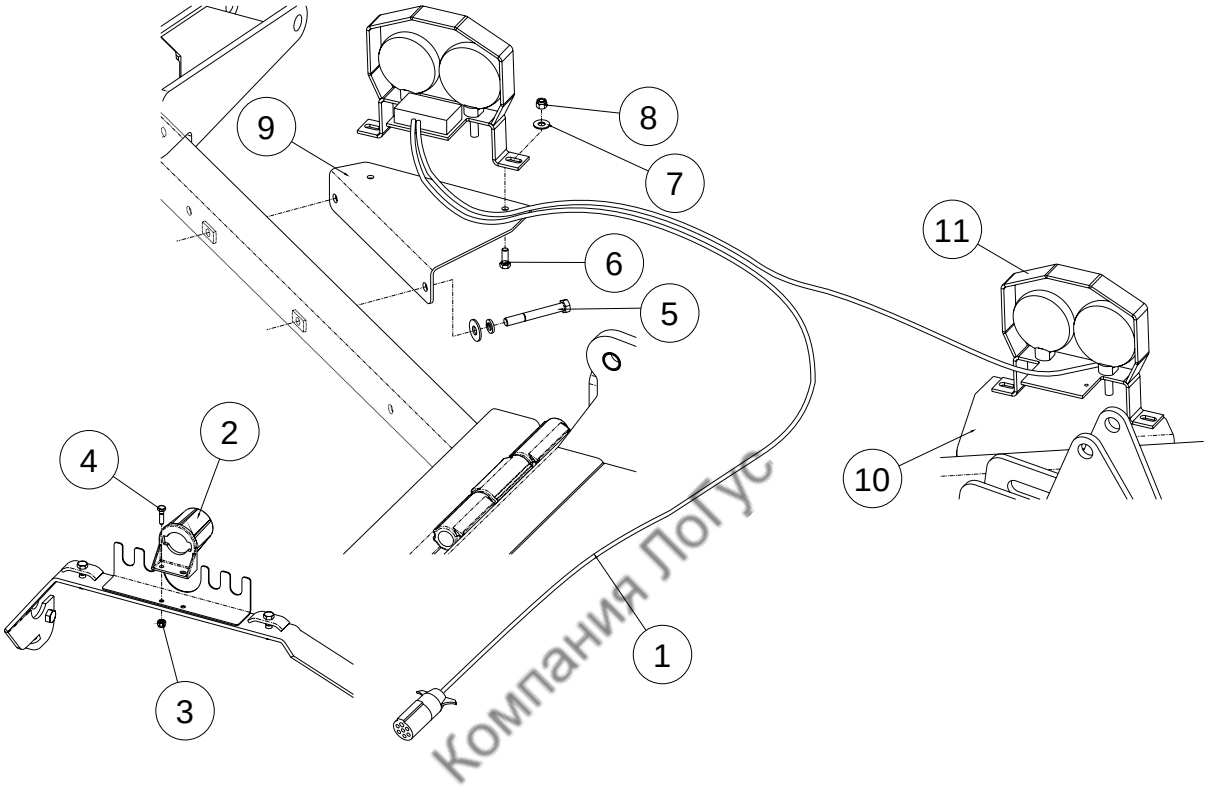

Компания ЛогУс

NOTE: The lights are to be mounted with the red and amber facing to the rear of the machine, with the amber to the outside.

Ref.	Part No.	Qty	Description
1	S000-088	1	Safety Light Kit, Includes Wiring Harness and Lights
2	S000-082	1	Plug Storage
3	270-025	2	Locknut, 1/4 , UNC
4	250-002	2	Bolt, 1/4 x 1 UNC
5		1	Hardware Supplied With Chain Guards
6	250-018	4	Bolt, 3/8 x 1 UNC
7	256-017	4	Washer, 3/8 UNC
8	270-017	4	Locknut, 3/8 UNC
9	S000-083	1	Right Wing Light Mount
10	S000-084	1	Left Wing Light Mount
11	S000-101	2	Light Bracket

© 2007 Alamo Group Inc.

PARTS INDEX

100-30 ..... 1, 40, 42
100-306 ..... 1, 40, 42
100-3061 ..... 1, 40, 42
100-3672 ..... 41, 43
100-3682 ..... 41, 43
100-3692 ..... 41, 43
101-020 43
101-021 ..... 42, 43
101-064 42
101-064W 42
101-065 43
101-066 43
101-067 43
101-082 43
101-083 43
101-084 43
101-134 43
101-135 43
101-136 43
101-137 43
101-138 43
101-139 43
101-142 43
101-155 42
101-243 43
101-280 42
101-281 42
101-282 42
101-283 42
108-056 40
108-069 ..... 40, 41
108-070 40
111-266 41
111-267 41
111-268 41
111-269 41
111-270 40
111-271 40
111-272 40
13-15 ..... 42, 43
201-002 25
201-005 23
201-018 23
201-019 23
203-003 ..... 17, 23
203-004 ..... 17, 21, 23
205-003 25
206-003 ..... 19, 25
206-013 ..... 17, 21, 23
207-010 25
207-013 25
207-014 25
207-015 ..... 23, 25
207-015C 23
207-016 25
207-017 25
207-018 25
207-019 23
207-019C 23
207-022 23
207-023 23
207-043 23
207-062 23
207-063 23
207-064 23
208-029 ..... 19, 25
208-030 ..... 17, 23
208-031 ..... 17, 21, 23
209-003 23
209-004 23
209-010 25
209-011 25
209-012 25
210-167 23
210-170 25
210-180 23
210-181 23
210-182 23
210-183 23
211-002 ..... 23, 25
211-015 23
211-016 23
225-103 35
225-104 35
225-113 35
227-001 15
229-010 ..... 9, 13
229-011 3
232-750 ..... 1, 11
232-751 11
232-752 11
232-753 11
232-754 11
232-755 11
232-757 11
233-053 ..... 17, 19, 21
233-055 ..... 17, 19, 21
233-056 39
250-002 ..... 15, 39, 60
250-012 39
250-018 60
250-019 15
250-020 ..... 15, 39
250-023 ..... 35, 42, 43
250-025 15
250-0251 15
250-026 35
250-045 ..... 15, 17, 19, 21
250-0452 ..... 17, 19, 21
250-0455 15
250-046 ..... 5, 7
250-047 31
250-0472 31
250-048 ..... 35, 37
250-050 ..... 17, 19, 21, 32, 33, 47, 49
250-0502 ..... 47, 49
250-053 ..... 32, 33
250-057 ..... 3, 31

Компания Полус

250-0571 31
250-059 ..... 3, 10, 27, 31, 32, 33, 39
250-060 ..... 3, 5, 7, 9, 13, 17, 19, 21
250-061 ..... 27, 31, 35
250-063 39
250-086 3
250-087 13
250-0871 13
250-088 ..... 3, 5, 7
250-089 3
250-093 13
250-095 13
250-105 ..... 17, 19, 21
250-109 10
250-114 31
250-1141 31
250-115 ..... 9, 13
250-116 ..... 9, 13
250-201 ..... 3, 5, 7
251-008 ..... 5, 7, 15
251-0081 15
251-016 ..... 10, 29
251-018 27
251-019 27
251-020 27
251-151 15
251-152 15
255-003 ..... 9, 13
255-009 ..... 10, 23, 31, 32, 33, 35, 39
255-015 ..... 5, 7
255-020 ..... 5, 7
255-021 ..... 10, 29
256-001 ..... 3, 5, 7, 9, 13, 39
256-003 ..... 9, 13
256-006 ..... 3, 13, 39
256-011 ... 3, 5, 7, 9, 13, 15, 17, 19, 21, 27, 31, 32, 33, 35, 37, 39
256-012 ..... 5, 7
256-017 ..... 15, 35, 60
256-018 15
256-020 ..... 5, 7, 15
256-071 10
256-0712 10
257-003 ..... 10, 27
257-008 3
257-032 ..... 15, 39
257-054 ..... 5, 7
257-107 ..... 10, 29
262-006 ..... 3, 5, 7, 9, 13, 39
268-004 39
270-001 ..... 9, 10, 13, 17, 19, 21, 31
270-0012 31
270-004 ..... 3, 5, 7, 13
270-007 ... 3, 5, 7, 9, 13, 15, 17, 19, 21, 27, 31, 32, 33, 35, 37, 39, 47, 49
270-008 31
270-0081 31
270-017 ..... 15, 35, 39, 42, 43, 60
270-020 39
270-025 ..... 15, 39, 60
271-005 ..... 3, 5, 7, 23, 39
271-008 ..... 9, 13
271-011 ..... 10, 29
273-001 10
273-006 ..... 3, 5, 7, 9, 13, 23, 25
273-011 ..... 17, 19, 21
280-150 15
280-151 ..... 3, 5, 7
280-201 15
280-301 40
280-302 40
300-01 ..... 5, 7
300-012 ..... 5, 7
302-00 ..... 3, 5, 7
302-002 ..... 5, 7
302-005 3
302-01 ..... 3, 5, 7, 39
302-012 ..... 5, 7
302-013 3
302-015 ..... 5, 7, 39
302-038 3
330-7014 ..... 1, 3, 52, 53
330-7023 ..... 1, 7, 54, 55
330-7024 ..... 1, 5, 56, 57
330-7034 ..... 1, 5, 7, 58, 59
330-900 ..... 1, 3, 50, 51
330-9001 ..... 1, 3, 50, 51
331-559 ..... 53, 55, 57
331-564 ..... 51, 53, 55, 57, 59
331-7007 ..... 55, 57, 59
331-7012 ..... 53, 55, 57, 59
331-7100 ..... 55, 57, 59
331-7101 53
331-7103 ..... 55, 57, 59
331-7104 53
331-7106 59
331-7107 ..... 53, 55, 57
331-711 ..... 53, 55, 57, 59
331-7110 ..... 53, 55, 57, 59
331-7113 ..... 53, 55, 57, 59
331-7114 ..... 53, 55, 57, 59
331-7115 ..... 53, 55, 57, 59
331-7116 ..... 53, 55, 57, 59
331-7117 ..... 53, 55, 57, 59
331-7118 ..... 53, 55, 57, 59
331-712 ..... 51, 53, 55, 57, 59
331-7120 ..... 51, 53, 55, 57, 59
331-7122 ..... 51, 53, 55, 57, 59
331-7123 ..... 51, 53, 55, 57, 59
331-7124 ..... 53, 55, 57, 59
331-7125 ..... 53, 55, 57, 59
331-7126 ..... 53, 55, 57, 59
331-7127 ..... 55, 57, 59
331-7128 53
331-7129 ..... 53, 55, 57, 59
331-713 53
331-7130 53
331-7147 ..... 53, 55, 57, 59
331-815 ..... 53, 55, 57, 59
331-8152 ..... 53, 55, 57, 59
331-878 ..... 53, 55, 57, 59
331-880 ..... 53, 55, 57, 59
331-901 ..... 51, 53, 55, 57, 59
331-9019 ..... 51, 53, 55, 57, 59
331-905 51
331-910 51
331-9101 51
331-9102 51
331-9103 51
331-9104 51
331-9105 51
331-9106 51

Компания Рокс

331-9107 51
331-9108 51
331-914 ..... 53, 55, 57, 59
340-3505 46
340-3506 45
340-4405 48
340-5510 44
340-5511 44
341-350 ..... 47, 49
341-3501 ..... 47, 49
341-3504 ..... 47, 49
341-3505 ..... 47, 49
341-3507 ..... 47, 49
341-3508 ..... 47, 49
341-3509 47
341-351 ..... 47, 49
341-3510 ..... 47, 49
341-354 ..... 1, 45, 46, 47
341-3541 46
341-3542 46
341-3543 ..... 45, 46
341-3544 ..... 45, 46
341-3545 46
341-3546 46
341-3547 46
341-3548 46
341-3549 ..... 1, 45, 46, 47
341-355 ..... 45, 47
341-3550 45
341-3551 45
341-3552 45
341-3553 45
341-3554 45
341-3555 47
341-3556 47
341-4402 48
341-4410 48
341-4425 ..... 47, 49
341-4426 49
341-4427 ..... 47, 49
341-4429 ..... 47, 49
341-4434 48
341-4435 48
341-4436 48
341-4437 ..... 44, 46, 48
341-4438 48
341-4439 48
341-4440 48
341-4441 ..... 1, 48, 49
341-4442 49
341-4443 49
341-5501 44
341-5512A 44, 46, 48
341-5512B 44, 46, 48
341-5512C 44, 48
341-5512G 46
341-5522 44
341-5554 ..... 44, 46, 48
341-5555 ..... 44, 45, 46, 48
341-5559 44
341-5564 44
341-5565 44
341-5566 44
341-5567 44
341-5568 44
341-5569 44
341-5570 44
341-5571 44
341-5572 44
341-5573 44
341-5574 44
341-5575 44
341-5577 ..... 44, 45, 46
341-5578 ..... 44, 45
341-5579 48
341-5580 46
341-5581 48
341-5598 44
341-5598A 44
341-624 ..... 5, 7
341-6242 ..... 5, 7
341-6243 ..... 5, 7
362-010 ..... 5, 7, 9, 13, 17, 19, 21
362-011 ..... 3, 5, 7, 17, 19, 21
362-020 3
401-024 ..... 10, 29
401-028 ..... 27, 29
401-034 27
401-064 ..... 10, 29
401-065 27
401-066 ..... 27, 29
401-067 ..... 27, 29
401-206 31
50 ..... 1, 47, 48, 49, 53, 55, 57, 59
6251-001 35
6251-002 35
6251-003 35
6251-004 35
6251-005 35
B601-125 15
C000-001 39
C000-005 40
C000-006 40
C000-012 39
C000-132 ..... 9, 13
C000-201 ..... 10, 29
C000-202 10
C000-301 10
C000-302 10
C000-303 10
C000-304 10
C000-305 10
C303-207 27
C303-213 27
C303-214 ..... 10, 29
C303-219 ..... 10, 29
C312-182 13
C312-187 13
C312-188 13
C320-132 ..... 5, 7
C502-107 9
C502-113 9
C502-128 ..... 17, 19, 21
C502-136 7
C502-137 5
C520-101 3
C520-115 9
C520-117 ..... 9, 13
C520-118 ..... 9, 13
C520-120 3
C520-121 5
C520-122 7

Компания РОС

C520-123 ..... 17, 19, 21
C520-124 ..... 17, 19
C520-125 21
C520-126 21
C520-127 3
C520-128 3
C520-129 ..... 5, 7
C520-130 3
C520-131 3
C520-132 3
C520-133 3
C520-134 ..... 5, 7
C520-135 ..... 5, 7
C520-136 ..... 5, 7
C520-137 ..... 5, 7
C520-138 ..... 5, 7
C520-139 ..... 5, 7
C520-140 3
C520-141 ..... 5, 7
C520-142 3
C520-143 3
C520-144 ..... 5, 7
C520-145 ..... 5, 7
C520-146 ..... 17, 19, 21
C520-147 3
C520-148 3
C520-149 ..... 5, 7
C520-150 5
C520-155 7
C520-160 39
C520-161 39
C520-162 39
C520-163 39
C520-164 39
C520-165 3
C520-166 ..... 5, 7
C520-167 ..... 5, 7
C520-168 ..... 5, 7, 39
C520-181 13
C520-182 13
C520-183 13
C520-184 13
C520-190 19
C520-191 19
C520-192 ..... 5, 7
C520-193 ..... 5, 7
C520-194 ..... 5, 7
C520-195 ..... 5, 7
C520-196 ..... 5, 7
C520-197 ..... 5, 7
C520-201 15
C520-202 15
C520-203 15
C520-204 15
C520-205 15
C520-206 15
C520-207 15
C520-208 15
C520-210 3
C520-211 3
C520-250 27
C520-251 27
C520-252 27
C520-260 27
C520-270 29
C520-271 ..... 32, 33
C520-272 ..... 32, 33
C520-273 32
C520-274 32
C520-275 32
C520-276 ..... 32, 33
C520-277 ..... 32, 33
C520-280 29
C520-281 31
C520-282 31
C520-283 31
C520-285 31
C520-286 31
C520-287 31
C520-288 31
C520-290 29
C520-291 33
C520-292 33
C520-293 33
C520-295 29
C520-296 33
C520-297 32
C520-316 ..... 17, 19, 21
C520-500 35
C520-501 35
C520-502 35
C520-503 35
C520-504 35
C520-505 35
C520-506 35
C520-507 35
C520-508 35
C520-509 35
C520-510 35
C520-511 35
C520-512 35
C520-513 35
C520-550 35
C520-580 37
C520-581 37
C520-582 37
C520-583 37
C520-584 37
C520-585 37
C520-590 37
C520-591 37
C520-592 37
C520-593 37
CS01-133 3
CS01-134 9
FRAME 1, 8
S000-010 60
S000-080 60
S000-081 60
S000-082 60
S000-083 60
S000-084 60
TIRES 1, 22, 23, 24, 25

Компания ГОЛС

Компания ЛоГус

SCHULTE®

Компания Лотус

5026 3/06
Printed in Canada
P/N C502RU010P